WALTHER-WERKE®
FORTSCHRITT SEIT 1897

IEC 60309-1 & 2
PIN & SLEEVE DEVICES

Information contained in this catalog is for reference only and subject to change at any time. For additional information, refer to the original standard or regulation or reach out to a member of our customer care team for clarification.

Walther-Werke reserves the right for technical changes. This information specifies the product but does not guarantee any properties.

Updates will be posted www.walther-werke.de and/or www.waltherelectric.com

For prices, please refer to our current trade price lists.

1897 Grimma: Foundation of WALTHER-WERKE

1910 Production of heavy and low voltage current plugs & sockets

1920 1300 employees, more than 6000 articles. Global sales

1949 Invention of the first power distributor for construction sites by Alfred Bosecker

1960 WALTHER submits standard recommendation for CEE17 plugs & sockets: another breakthrough

1970 Relocation to Eisenberg, takeover of company Müller (heavy duty connectors)

WALTHER-WERKE
A TRADITION OF ELECTRICAL ENGINEERING SINCE 1897

1897 – Ferdinand Walther founds WALTHER-WERKE. Since this time, the world has changed dramatically. After the second and third industrial revolutions, we are now entering the fourth: Industry 4.0. In the world of work and in our everyday lives, far-reaching changes are on the way. During such dynamic times, reliable partners are needed who are working now to prepare for the future.

WALTHER-WERKE have over hundred and twenty years of experience and are the experts in low voltage distribution. Since it was first founded, the company has proven its excellence time and time again at providing products and solutions for present-day and future needs. Adaptation and innovation are therefore part of WALTHER's DNA. So it is no coincidence that key innovations, such as the construction site power distributor in the 1940s and the CEE type plug connector in the 1960s were inventions by WALTHER-WERKE.

1990 ISO 9001 certification, establishment of sales offices France and USA

2001 Takeover of company Bosecker. Extension of product range by transformer stations and power distributors.

2008 Start E-Mobility business unit

2013 Quality management according to automotive standard ISO/TS 16949. New division WALTHER SYSTEMS for intelligent distribution systems + energy management. The product areas are growing together.

2016 CEE NEO and IPD (intelligent power distribution) as solution for energy management and industry 4.0

2020

Today, the Group as a whole employs more than 400 people in the development, production and marketing of CEE type plug and socket connections, plug and socket combinations, industrial plug connectors, electromobility charging infrastructure, power distributors, and transformer stations.

As a company with a global presence, WALTHER-WERKE is represented with its products and services on all of the world's core markets. In addition to more than 60 independent sales partners, the WALTHER Group has fully-owned subsidiaries in the USA, the UK, France, and Austria. These are primarily represented on the markets with sales and in some cases production activities, with the aim of providing our customers and partners with the best possible service.

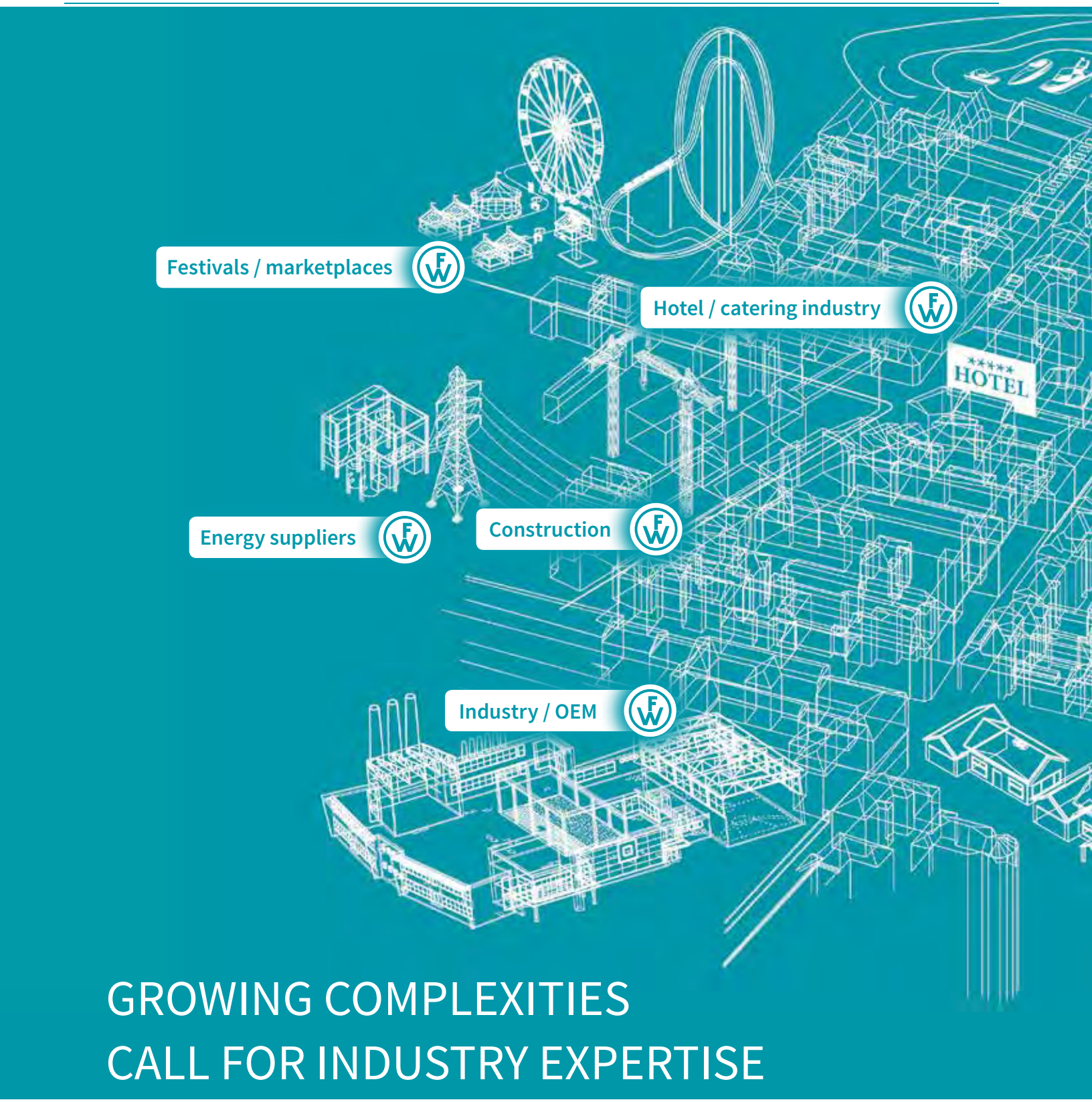

GROWING COMPLEXITIES CALL FOR INDUSTRY EXPERTISE

Providing energy to our economies efficiently is going to become one of the key challenges over coming decades. Raw materials are dwindling, yet demand is growing significantly. Subjects such as environmental protection, safety and cost-effectiveness are moving increasingly into focus. Technological developments and complexities in terms of content are growing at a rapid pace across all areas of application. The concentration and training of expertise is therefore essential if we are to overcome the challenges of the future.

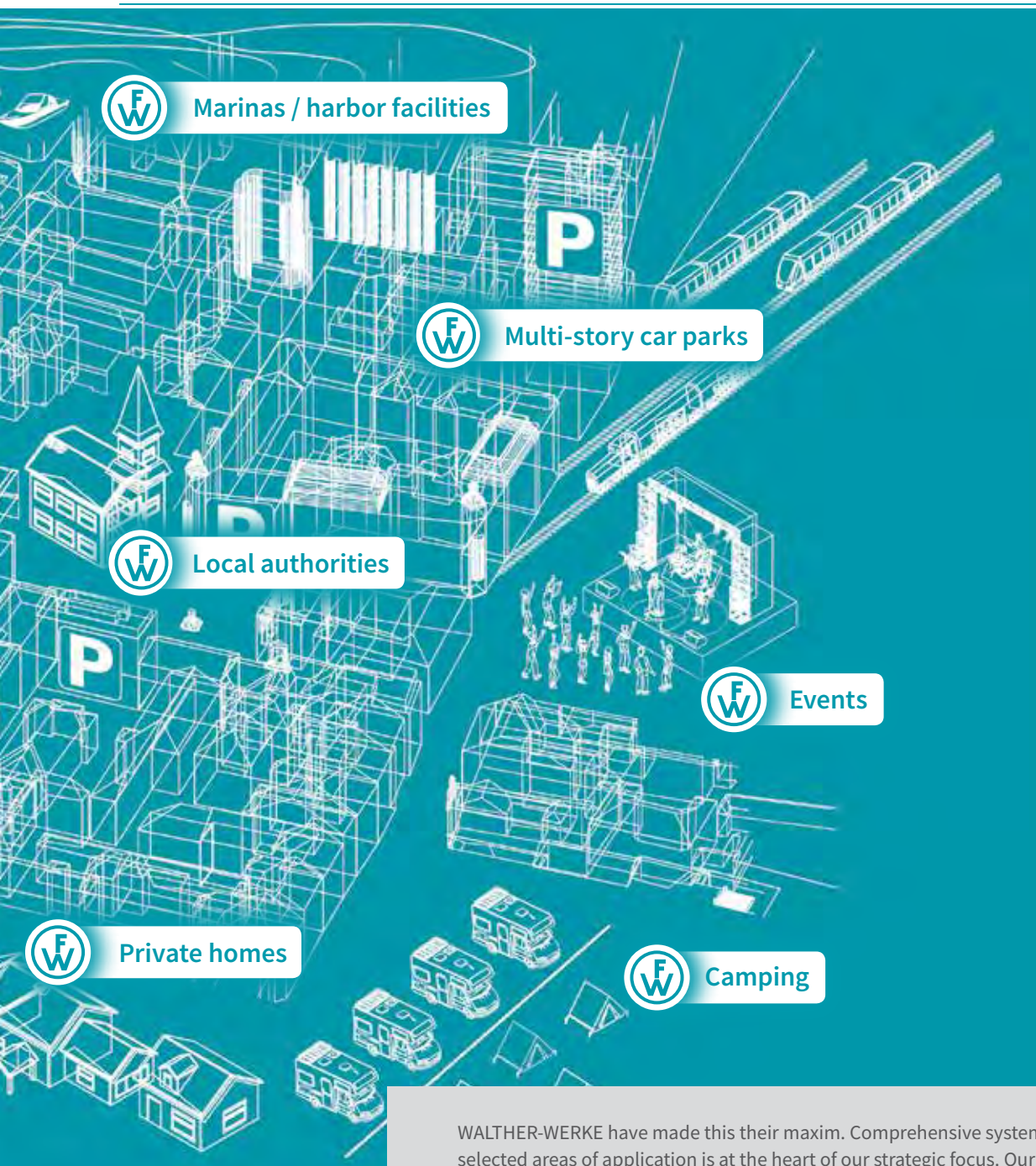

WALTHER-WERKE have made this their maxim. Comprehensive system expertise in selected areas of application is at the heart of our strategic focus. Our mission: To link electrical consumers with the energy
supply network, primarily in the areas of construction, leisure, industry and mobility. To do this, we use our unique portfolio of products comprising transformer stations, power distributors, plug and socket combinations and plug systems that are tailored to their application.

Combined with over 100 years of experience in the field of power distribution, a consistent focus on customer service and high-quality solutions, we want to provide our partners with the maximum benefits possible. Leading energy suppliers, automotive manufacturers, construction companies and industrial firms, as well as operators of campsites or yachting and container harbors, as well as organizers of events worldwide, therefore trust our solutions.

EXPERTISE AND COMMITMENT

WALTHER-WERKE have traditionally had a high degree of vertical integration when it comes to production. This means that virtually all of the key products are manufactured at German production sites. This allows us to guarantee our customers maximum flexibility, quality and most importantly technological expertise. WALTHER can handle every kind of customer request. From the creation of product and functional requirements in consultation with our customers and the development, design and creation of tools to products validated by our own, in-house testing laboratory: All from a single source. Components that we do not make ourselves are obtained exclusively from renowned, high-quality manufacturers with whom we have long-standing partnerships. After all, these components end up in a WALTHER product – and so we bear the responsibility for our customers' satisfaction.

But we don't just work under our own roof. WALTHER-WERKE's tradition also includes assuming an honorary role when working and taking responsibility with associations, as well as national and international standardization committees. This means we are able to contribute our extensive product and system expertise to the standardization process and also to ensure the advice we give to our customers always reflects the most up-to-date information.

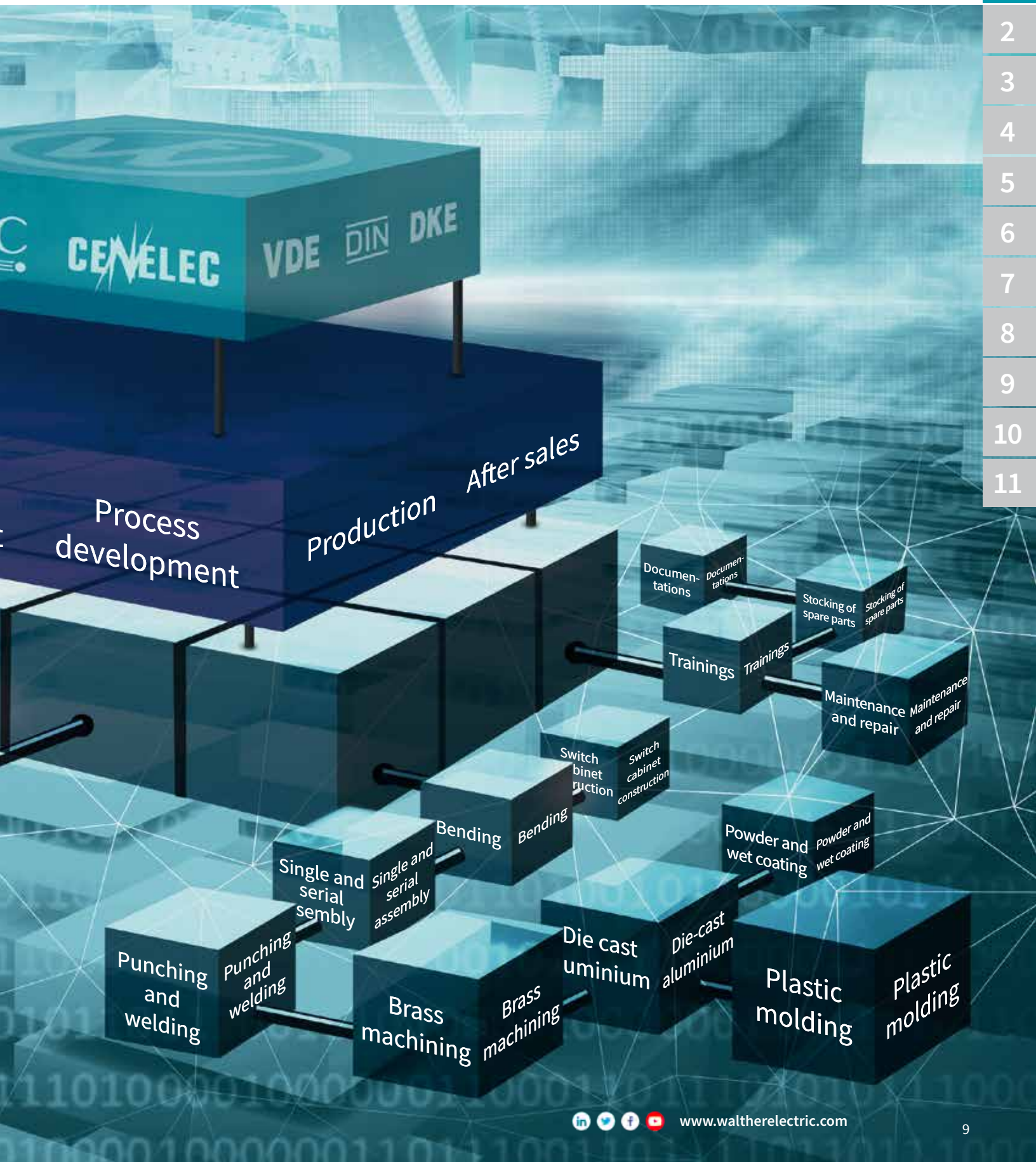
CENELEC
VDE
DIN
DKE
Process development
Production
After sales
Documen-tations
Documen-tations
Stocking of spare parts
Stocking of spare parts
Trainings
Trainings
Maintenance and repair
Maintenance and repair
Switch binet ruction
Switch cabinet construction
Bending
Bending
Powder and wet coating
Powder and wet coating
Single and serial sembly
Single and serial assembly
Die cast uminium
Die-cast aluminium
Punching and welding
Punching and welding
Brass machining
Brass machining
Plastic molding
Plastic molding


ISO
IEC
CENELEC
VDE
DIN
WALTHER-WERKE
Specification
Product-
development
Process
development
Production
APQP
Lean
FEM
DOE
Moldflow
FMEA
Wertanalyse
Kanban
One Piece
Flow
Energiemanagement
ISO 50001
Qualitätsmanagement
ISO TS 16949
ISO 9001

INTEGRATED MANAGEMENT SYSTEMS ENSURE CUSTOMER-FOCUSED PROCESSES

Quality and quality management at WALTHER-WERKE means much more than mere product quality in the form of value and reliability.
For us, quality management is an holistic management approach and is expressed in all of the company's activities.

By taking this approach, not only do we target quality assurance, but most importantly we aim to continuously improve all of our processes, regardless whether they are value-creating or supportive – and always with the goal of maximum customer satisfaction. Quality begins with the documentation of customers' and market needs and continues to include product development (FMEA, APQP etc.) through to the entire life cycle of our products. Processes must be measurable in terms of efficiency and effectiveness, and therefore steerable. For us, this comprehensive quality management forms the foundations of long-term, successful commercial relationships with our partners.

To raise our quality management to the highest possible level, we extended our ISO 9001 certification in 2013 to the international automotive standard ISO/TS 16949 – one of the most challenging certification standards. We use this standard not just for our automotive products, but also to all of WALTHER-WERKE's product areas. That's because we are convinced that only consistent quality management will bring long-term success.

Our production has established a lean management system, the 'WALTHER-WERKE production system (PS)', declaring war on loss and waste.

Today we have a modern and regionally referenced production system which, through consistent shop floor management, represents all of the relevant performance indicators in a cascaded manner and optimizes them continuously through problem-solving methods in combination with a broad-based lean methods toolkit (SMED, One Piece Flow, Kanban, TPM, value stream design etc.) to benefit our customers. Skilled CIP teams work daily to improve our processes and integrate ideas from all employees regarding the best solutions. Lean management, and therefore ongoing continuous improvement (CIP), has therefore matured into part of the corporate culture nowadays at WALTHER.

SALES: GLOBAL PRESENCE FOR MAXIMUM CLOSENESS TO THE CUSTOMER

Our slogan, “Your best connection” should be regarded not just as the overriding principle for the best connection technology, but also in particular counts as an incentive and inspiration in our interactions with customers to guarantee a reliable and trusting “connection” at all times. It is only through close communication with our customers that tailor-made solutions even become possible. A dense global sales network, comprising four of our own subsidiaries and 60 international branches across all continents highlights our ambition to satisfy our customers’ wishes through expertise and closeness to the market. We are not interested in short-term successes, preferring instead partnerships of many years’ continuous standing that play a vital role in our customers’ strategic focus and which therefore represent an essential element of their added value process.

BOSECKER VERTEILERBAU SACHSEN GMBH, ZITTAU

WALTHER-WERKE FERDINAND WALTHER GMBH, WALTHER SYSTEMS, LEIPZIG

F. WALTHER ELECTRIC CORP, USA

We regard ourselves as the ideal partner to the electrical trade and as a systems supplier to the industry and construction sector. To ensure the availability of our products at all times, we also use the logistical opportunities made available to us by our electrical wholesale partners. The satisfaction of our customers lies at the heart of everything we do. Worldwide, with high-quality products and flawless service worthy of the label “Made in Germany”.

WALTHER-WERKE, EISENBERG

F. WALTHER ELECTRICS LTD,
UNITED KINGDOM

F. WALTHER SARL,
FRANCE

WALTHER ELECTRIC GMBH,
AUSTRIA

www.waltherelectric.com

WALTHER-WERKE – CREATING CONNECTIONS BETWEEN ELECTRICAL CONSUMERS, CUSTOMERS AND THE ENERGY SUPPLY NETWORK

We offer comprehensive solutions for power distribution from medium voltage upwards and bring these to the consumer. Whether it be construction cranes, electric cars, industrial systems or camper vans – with static and mobile transformer stations and switchgear, we transform or switch low voltage to a maximum of 400 V. The decentral distribution then takes place via a broad selection of very different primary, sub and terminal distributors for all kinds of temporary or static applications. The great thing about it is that the power distribution is scalable and can be expanded at any time to reflect the real energy demand.

The “handover point” to consumers takes the form of CEE type plug and socket connections, industrial plug connectors and charging connections for electromobility. These are “Made by WALTHER”. This means everything from a single source, and everything is linked; designed to offer the maximum service life, in even the harshest environmental conditions.

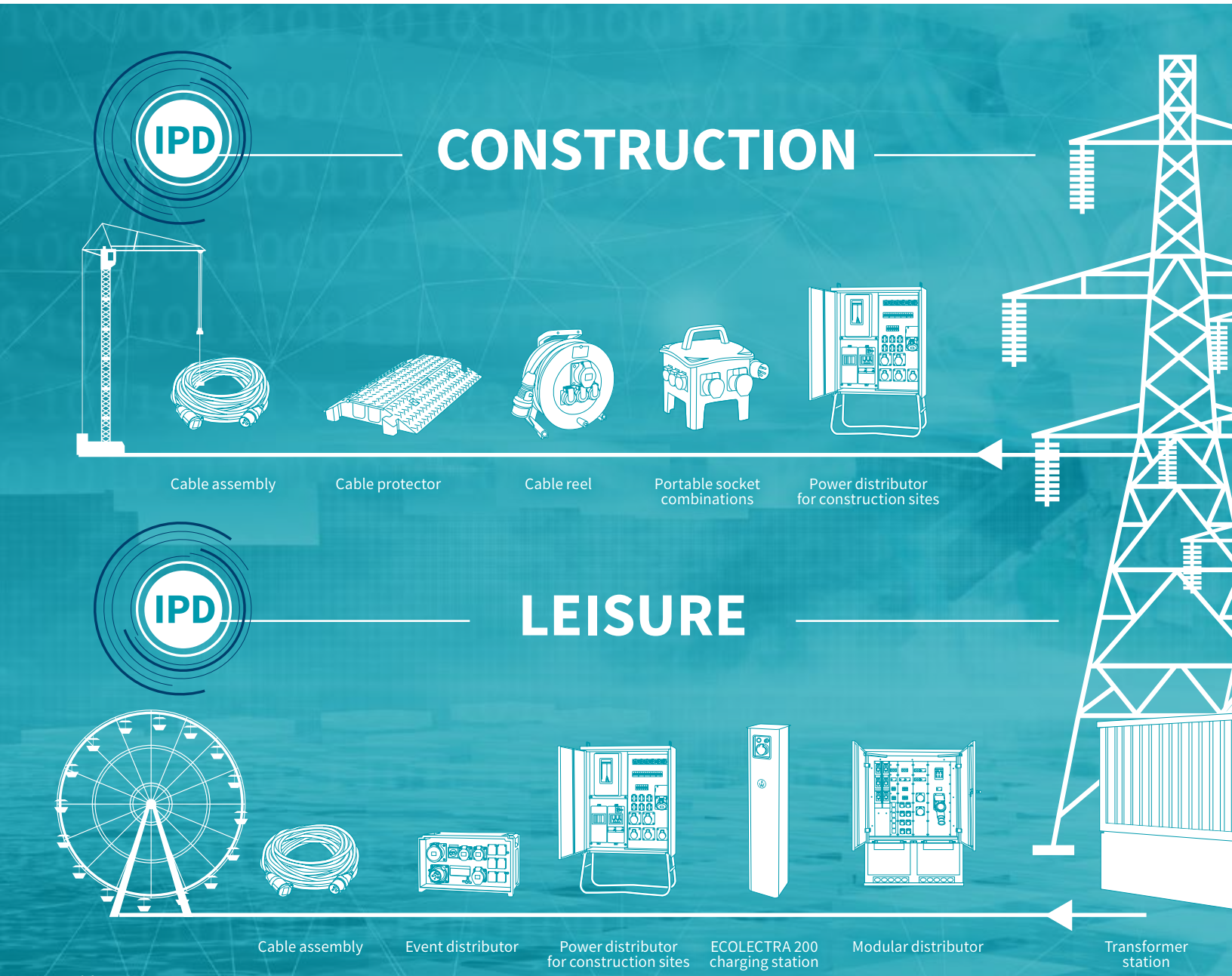

The unique breadth and depth of its product portfolio means that WALTHER-WERKE is able to design perfectly coordinated, comprehensive solutions and systems for its customers . The advantage for our customers most importantly lies in the fact that there is only one contact responsible for the entire project, with all of its overall system requirements.

This means that customers are spared the laborious task of compiling the individual components themselves. Even if the needs increase later or if there are other technical challenges, there is only ever one contact. Thanks to their system expertise, this contact will be able to offer effective and efficient solutions quickly.

INDUSTRY

IPD

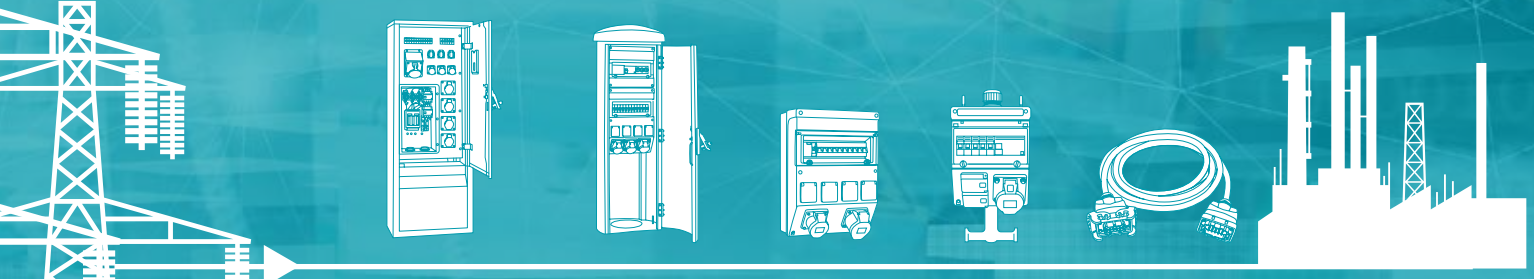

Industrial power distributor | Bollard | Wall mount socket combination | Suspension-type socket combination | Cable assembly

MOBILITY

IPD

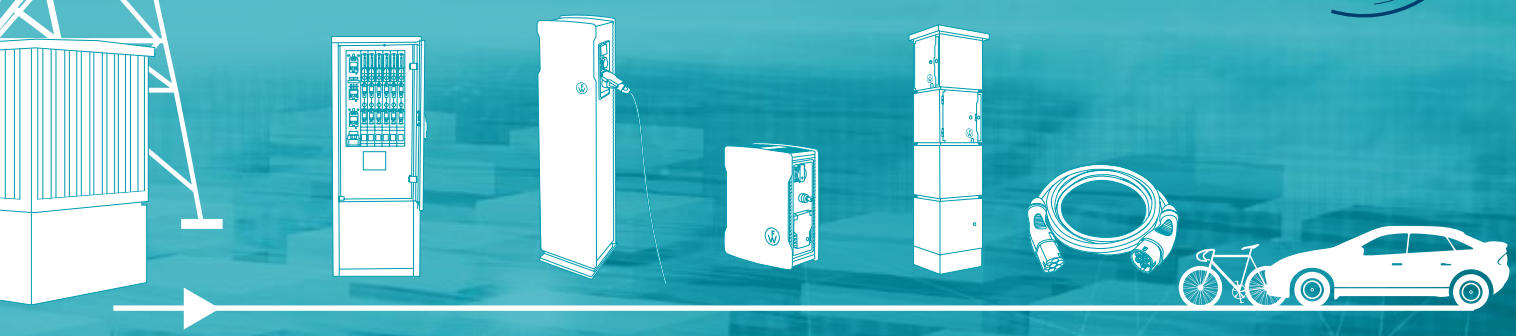

Cable distributor | EVOLUTION 350 Charging station | EVOLUTION Wallbox | CUBE Pedelec charging cabinet | Charging cable

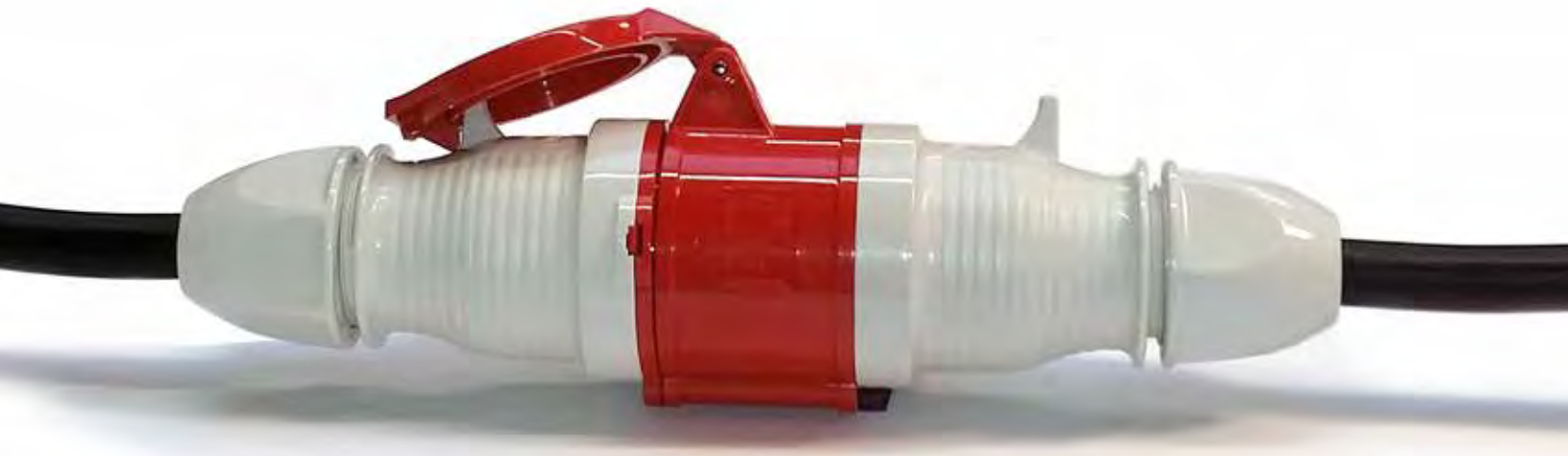

DEVELOPMENT OF THE IEC 60309 STANDARD

The international standard for CEE plugs and sockets is specified in IEC 60309. This became historical Standard derived from the CEE17, which is derived from the standardization draft of WALTHER-Werke in the 1960s. In Great Britain, the CEE17 was used as BS 4343 (also known as the CEE form "). The IEC 60309 describes the basic requirements for plugs, sockets, couplers and device connectors for industrial applications. This standard was derived from the European standard CEE published in 1966, due to global trade relationships, to create standardization at the global level. Thanks to this global standard, it is now possible to place machines, systems and devices anywhere in the world without having to use country specific plug-in systems.

WALTHER CEEtyp connectors are CEE connectors according to the international standards IEC / EN 60 309-1 and 60 309-2.

Overview of the development of standards

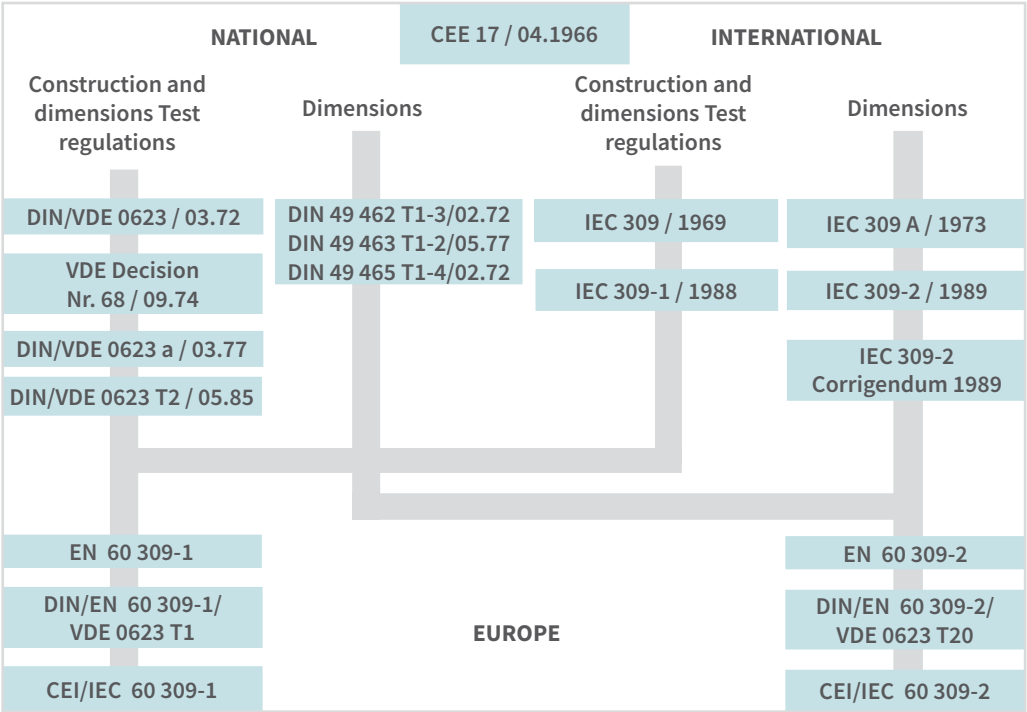

CEE - International Commission on Rules for Approval of Electrical equipment
IEC - International Electrotechnical Commission
CEI - Commission Électrotechnique International
DIN - German Institute for standardization
VDE - Association of German Electrical engineer
EN - European standard

Walther CEE clock according to IEC 60309-1 (Series I)

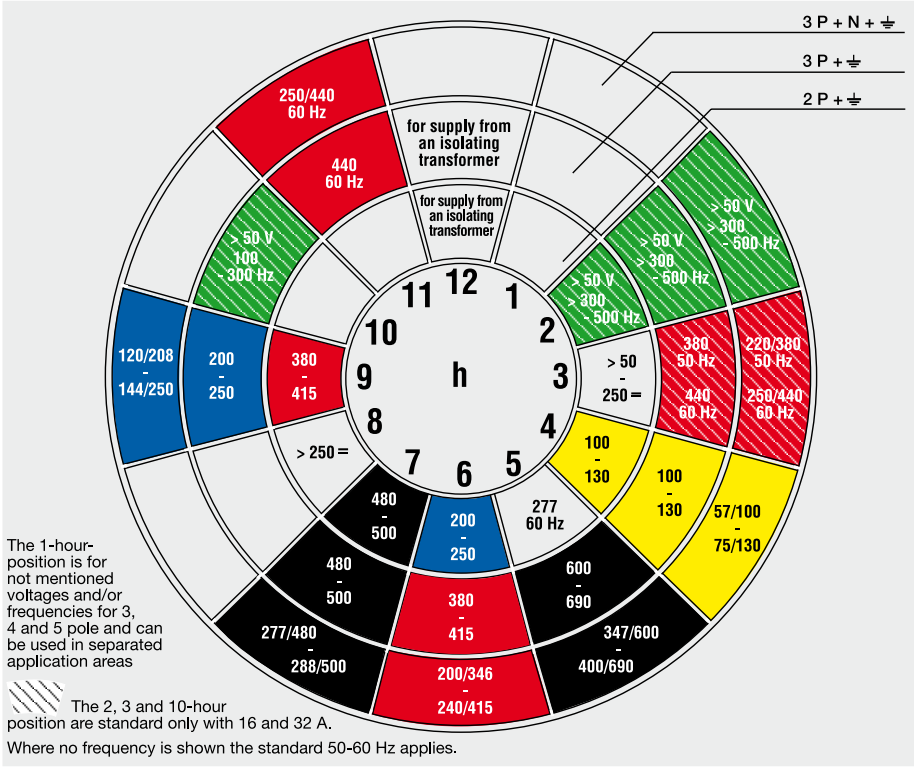

This chart is used to indicate the voltage and frequency in accordance to IEC 60309-1 (Series 1). The system has been designed to maximize safety, avoid mismatching, and promote interchangeability among manufacturers.

A clock face is used to represent the location of the ground sleeve for a specific voltage system. The positions of the ground pins are relative to the socket's key and are designated as a clock hour position depending on the voltage rating of the part.

The time settings are always referenced from the FEMALE side of the connection.

The general maximum permissible load values are as follows:

- Max voltage.: 690 V (DC or AC voltage),
- Max. current carrying capacity: 125 A
- Max. frequency: 500 Hz
- Operating environment temperature from -25 to +40 °C

Position of grounding sleeve	Standardized usage examples	Standardized voltages and frequencies Recommended color coding as per IEC 650309-1, -2		
		3 2 P + E	4 3 P + E	5 3 P + N + E
1 h	Open for special applications	For all voltages and frequencies (up to max. 1000 V) that are not listed in one of the other groups		
2 h	Concrete vibrator/compressor, high-frequency motors	> 50 V > 300 - 500 Hz 16 A / 32 A	> 50 V > 300 - 500 Hz 16 A / 32 A	> 50 V > 300 - 500 Hz 16 A / 32 A
3 h	4-pole and 5-pole cooling containers (standardized as per ISO)	50 - 250 V DC	380 V 50 Hz 440 V 60 Hz	220/380 V 50 Hz 250/440 V 60 Hz
4 h	Voltage levels in parts of England or English colonies	100 - 130 V 50/60 Hz	100 - 130 V 50/60 Hz	57/100 - 75/130 V 50/60 Hz
5 h	Open pit mining or tunnel construc-tion	277 V 60 Hz	600 - 690 V 50/60 Hz	347/600 - 400/690 V 50/60 Hz
6 h	Standard voltages in Western Europe	200-250 V 50/60 Hz	380 - 415 V 50/60 Hz	200/346 - 240/415 V 50/60 Hz
7 h	Open pit mining and mining	480 - 500 V 50/60 Hz	480 - 500 V 50/60 Hz	480-500 V 50/60 Hz6
8 h		> 250 V DC	1000 V	Not occupied
9 h	Voltage level, e.g. Norway	380 - 415 V 50/60 Hz	200 - 250 V 50/60 Hz	120/208 - 144/250 V 50/60 Hz
10 h		Not occupied	> 50 V > 100 - 300 Hz	Not occupied
11 h	e.g. maritime installations	Not occupied	440 - 460 V 60 Hz	250/440 - 265/460 V 60 Hz
12 h	For voltages after isolation and isolating transformers	after isolating transformer	after isolating transformer	

WALTHER CEE CLOCK IEC 60309 (SERIES II) AND UL 1686

Clock positions seen from the FEMALE side of the connection

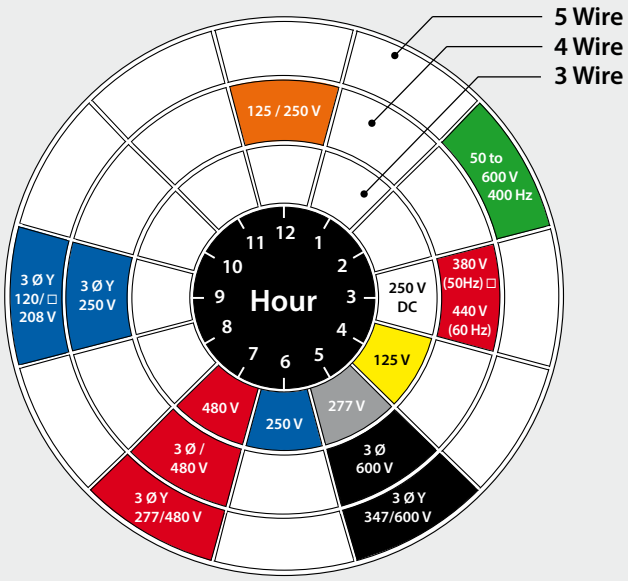

North American rated voltage alternating current (AC), if not specified otherwise

In countries where series II devices are used, the color orange is reserved for devices for 125/250 V~ and the color gray is reserved for devices for 277 V~.

The rated voltages are:

2 poles - 3 wire (3-pole) Volt Clock position Color code	125 V AC 4 yellow	250 V AC 6 blue	277 V AC 5 gray	480 V AC 7 red
	250 V DC - 3 h - blue			
3 poles - 4 wire (4-pole) Volt Clock position Color code	125/250V AC 12 orange	3Ø250 V AC 9 blue	3Ø480 V AC 7 red	3Ø600 V AC 5 black
4 poles - 5 wire (5-pole) Volt Clock position Color code	3ØY120/208 V AC 9 blue	3ØY 277/480 V AC 7 red	3Ø 347/600 V AC 5 black	

UL 1682 and UL 1686 C2

Other voltage systems are used in the USA and Canada. The rated frequency is also 60 Hz.
The phase identifiers are:

L1 = X, L2 = Y, L3 = Z,

Neutral conductor N = W or white dot,

Protective conductor ⏚ = G or green dot.

The rated currents are 20, 30, 60 and 100 A.

Setup of a CEE plug and socket device > 50 V

Voltage systems with voltages > 50 V must have a protective contact. The protective contact as well as the phases and any neutral conductors present are arranged in a circle.

An essential safety feature is that unintentional connecting between different current, voltage and frequency versions is not possible due to several properties. The plug has an outer keying position that can only be plugged into an equivalent recess / groove on the socket. The keying position and recess are always in the 6 o'clock position. The earth contact must have the right clock position both on the plug and socket side guided by this keying position/groove principle. In addition it has a larger diameter. The diameter is to be measured so that it is not inserted through the isolated feedthrough holes of the phases and any existing neutral conductor contact, which protects against reverse polarity. The protective conductor can therefore not be inserted into a live conductor. The larger diameter of the earth contact also leads to less contact resistance, which further increases the protective function. The position of the groove and keying position of the earth contact cannot be changed by the manufacturer for the user. The contact diameters vary in size for increasing currents.

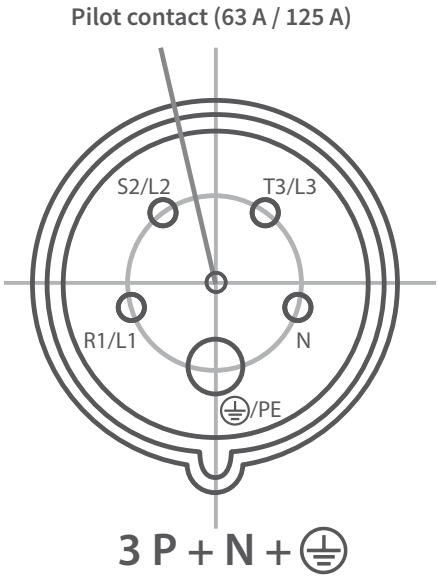

Arrangement of contact sleeves and terminal designations at 6 h position.

There are a total of 8 rated currents over 50 V as per IEC 60309:

Voltage V (volt)	Rated current A (ampere) Series I	Rated current A (ampere) Series II
Over 50 V	16 A	20 A
	32 A	30 A
	63 A	60 A
	125 A	100 A

The protective contact sleeve has the shortest distance to the plug surface, thus the protective contact connection is pre-mating when plugging a plug into the socket opposite the live contacts and lagging when disconnecting the plug. The sockets have a groove at the 6 o'clock position to eliminate mis-mating. The position of the protective contact sleeve to this groove indicates the coded voltage. The coded voltage may only be adjusted by the manufacturer. If the protective contact coded voltage is color-coded, then the colors as per IEC/EN 60309-1, table 2 are to be used.

During the standardization of the CEE plugs and sockets, emphasis was placed on optimal power transmission with the large contact surfaces between pins and sleeves. The brass sleeves are reinforced with additional tension springs in order to establish a current transfer over the entire contact surface of the pin. This reduces heating under high load. An additional safeguard against contact separation is brought about by the hook function of the spring-loaded hinged cover of the socket and coupler.

All plugs and sockets must have a minimum IP44 degree of protection and sufficient strength to meet the rated data of the marked degree of protection after they were exposed to shocks that occur during proper operation. For currents of 125A or greater, the IP67 degree of protection according to EN 60529 is required by standard. The IP67 degree of protection is achieved by a ring-shaped bayonet closure with a seal between the plug and outlet. However, plugs and sockets in lower currents can also be designed in IP67.

Rated operating voltage V	Color
20 – 25	Purple
40 – 50	White
100 – 130	Yellow
200 – 250	Blue
380 – 480	Red
500 – 690	Black

Source: IEC/EN 60 309-1, table 2

Overview of the classification of IP and IK degrees of protection

IK identification, EN 62262

The ID identification consists of 2 code digits (e.g. IK 06)

2 code digits

Degree of protection of safety against mechanical damage.

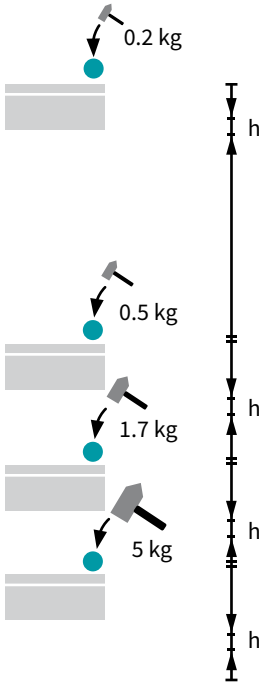

	h (cm)	Impact energy (J)
01	7.5	0.15
02	10	0.20
03	17.5	0.35
04	25	0.50
05	35	0.70
06	20	1
07	40	2
08	29.5	5
09	20	10
10	40	20

IP44
SPLASH PROOF

DUST TIGHT
IP54
SPLASH PROOF

DUST TIGHT
IP65
LOW PRESSURE

DUST TIGHT
IP67
WATERTIGHT

Code digit	1st code digit: Protection against foreign bodies and contact		2nd code digit: Protection against water	
0	not protected		not protected	
1	protected against solid foreign bodies > 50 mm		protected against vertically falling drip water	
2	protected against solid foreign bodies > 12.5 mm		protected against dripping water hitting at an angle	
3	protected against solid foreign bodies > 2.5 mm		protected against spray water	
4	protected against solid foreign bodies > 1 mm		protected against splash water	
5	protected against dust		protected against jet water	
6	sealed against dust		protected against strong jet water	
7	–		protected against temporary immersion	
8	–		protected against permanent immersion	...m

SAFE. RUGGED. RELIABLE.

Walther's Pin & Sleeve devices are built tough to work reliably and last - even in the roughest terrains, challenging applications and most extreme environments

RETAINING DEVICE

Holds female connector lid in place to help prevent accidental disconnect under load

HIGH IMPACT THERMOPLASTIC HOUSING

Heavy-duty industrial insulated housings are made from high impact nylon material which is resistant to corrosion and abrasions. Non-conductive material is UV stabilized to protect against warping or discoloration

COLOR CODED

Color coded by voltage for quick identification to prevent mis-matching connection

SOLID BRASS PINS

Low contact resistance, high corrosion resistance and excellent conductivity for long lasting, reliable electrical contact

DOUBLE TERMINAL SCREWS

Provides safe and secure contact between conductor and terminal. Screws are captive, easily accessible and supplied in the OPEN position.

SPLIT CONTACT SLEEVE WITH NICKEL PLATED STEEL SPRING

Provides optimum insertion/withdraw force and constant contact pressure

CHAMFERED TERMINALS

Transitional edge creates a funnel entry to guide wire stands for ease of installation

IEC 60309 PIN & SLEEVE DEVICE FEATURES

INTERNAL STRAIN RELIEF

Designed to firmly grip not only the outer cable jacket but also the internal conductors. Eliminates strain on the terminals while providing high pull-out values. “Swing-Away” feature provides easy access to terminal screws

RETAINING DEVICE

Holds female connector lid in place to help prevent accidental disconnect under load

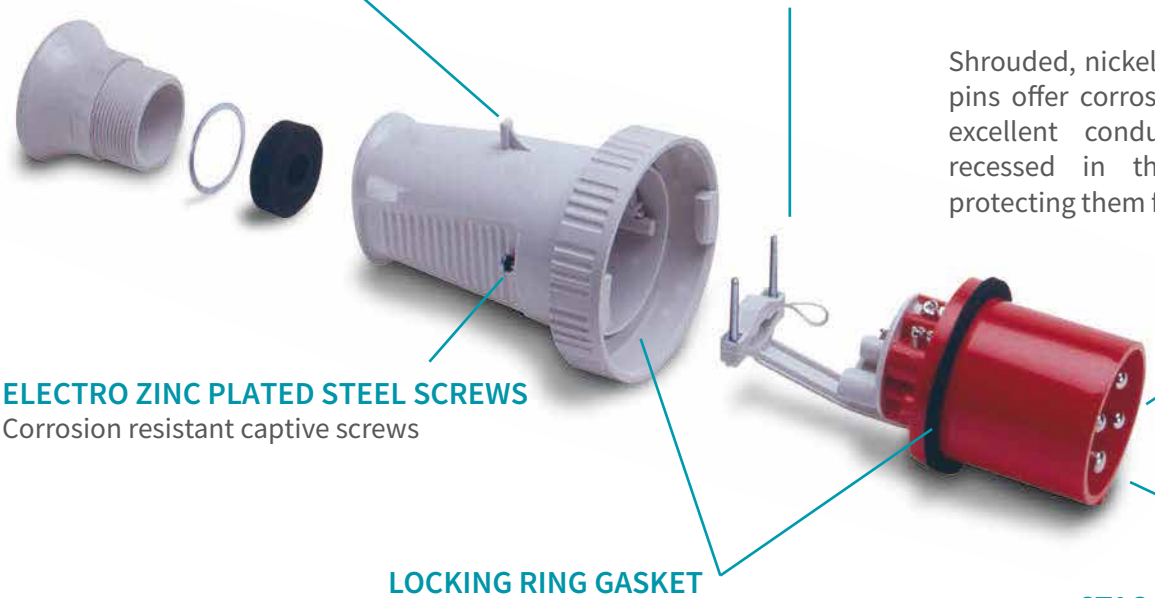

SHROUDED PINS

Shrouded, nickel-plated, solid-brass pins offer corrosion protection and excellent conductivity. They are recessed in the nylon housing protecting them from deforming due to physical abuse

ELECTRO ZINC PLATED STEEL SCREWS

Corrosion resistant captive screws

LOCKING RING GASKET

Protects against intrusion of dirt, dust and moisture when the male and female devices are connected

STAGGERED CONTACTS

Oversized ground contact is furthest forward, assuring first to mate - last to break. Neutral is next to prevent the possibility of an open netural condition. Phase contact is farthest making it last to mate - first to break for added safety

FIRST MAKE/LAST BREAK (FMLB)

Connectors ensure the ground path is established before any other power or signal connections are made preventing making or breaking the circuit under load

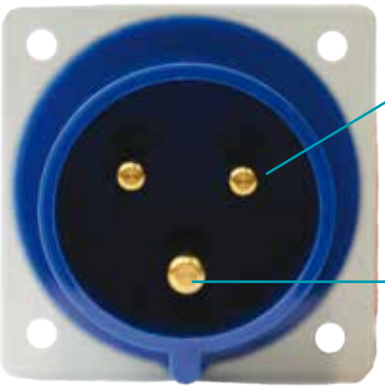

635306

CLOCK POSITION (Earth Ground)

Position of earth ground contact pin with respect to the FEMALE keyway groove

KEYWAY

TERMINAL IDENTIFICATION

Ground, neutral and phase terminals are clearly identified for easy recognition and ease of wiring

SPRING LOADED GASKETED COVER

Snaps into place when the plug is removed. Protects against encounter with live contacts while keeping out dirt, dust and moisture

INTERNAL STRAIN RELIEF

Designed to firmly grip not only the outer cable jacket but also the internal conductors. Eliminates strain on the terminals while providing high pull-out values. “Swing-Away” feature provides easy access to terminal screws

RECESSED CONTACTS

Contact sleeves are recessed in the narrow contact tubes protecting against any accidental encounter with live contacts

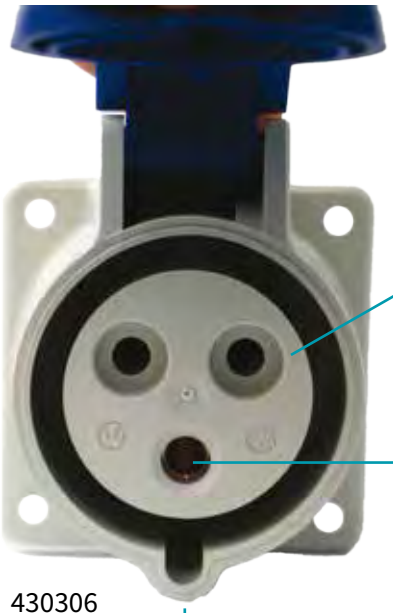

430306

FIRST MAKE/LAST BREAK (FMLB)

Connectors ensure the ground path is established before any other power or signal connections are made preventing making or breaking the circuit under load

CLOCK POSITION (Earth Ground)

Position of earth ground contact sleeve with respect to the FEMALE keyway groove

KEYWAY GROOVE

Materials, plastics and metals used:

CEEtyp plug and socket enclosures and contact carriers are made of high-quality halogen and cadmium-free plastics and are suitable for temperature ranges from -25°C to +100°, including contact heating. The plastics used are certified according to UL-94 and are self-extinguishing or non-flammable.

CEEtyp plug and socket contacts are machined from solid brass and can be nickel-plated to provide extra corrosion resistance without sacrificing electrical conductivity. Steel parts, like screws and springs, are galvanized and blue chromed or nickel-plated making them corrosion-resistant while increasing longevity.

The terminal cross sections are designed according to IEC/EN 60 309-2 table 107. The contact may heat up by + 50 K to the initial temperature under test conditions according to table 8.

Rated conductor cross-sections

Nominal values of the plugs and sockets			Internal connections [1]						External connections (if available)		
Voltage V	Rated current A		Cables for plugs and couplers, single or multi-wire cables for appliance inlets [2]			Single or multi-wire cables for sockets [2]					
	Series I	Series II	mm²	AWG	Terminal size	mm²	AWG	Terminal size	mm²	Terminal size	AWG
up to 50	16	20	4 - 10	12-8	6	4 - 10	12 - 8	5			
	32	30	4 - 10	12-8	6	4 - 10	12 - 8	5			
over 50	16	20	1 - 2.5	16-12	2	1.5 - 4	16 - 12	3 [3]	6	4	10
	32	30	2.5 - 6	14-10	5	2.5 - 10	14 - 8	5	10	5	8
	63	60	6 - 16	10-6	7	6 - 25	10 - 4	7	25	7	4
	125	100	16 - 50	6-2	9 [4]	25 - 70	4 - 0	9 [4]	25	7	4

Source: IEC/EN 60 309-2, Table 107

[1] Connection terminals for pilot conductors, if present, must permit the connection of conductors with the same nominal cross-sections as the inner connection terminals of 16 A plugs and sockets with rated operating voltages over 50 V.

[2] Classification of cables: According to HD 383 S2 § 2 solid (class 1); multi-wire (class 2); flexible (class 5).

[3] for socket terminals, terminal size 2

[4] Compliance with terminal size 9 is temporarily not required.

Preferred rated current series I/II		Test current	Cross-sections of the conductors			
			Plug, appliance inlet and coupler		Sockets	
Duration	A	A	mm²	AWG	mm²	AWG
1 h	16/20	22	2.5 [1]	13	4 [1]	11
1 h	32/30	42	6 [1]	10	10	7
2 h	63/60	Rated current	16	5	25	3
2 h	125/100	Rated current	50	1/0	70	2/0

Source: IEC/EN 60 309-1, table 8

[1] The values are increased to 10 for plugs and sockets up to 50 V rated operating voltage.

The plastics have a varying chemical resistance depending on the design.

The subdivision usually takes place in three simple categories:

Chemical Resistance:

The material retains its unchanged characteristic mechanical (e.g. strength), physical (e.g. coloring) and chemical (e.g. composition) properties, despite any long-term contact with the chemical substance to be tested. Since this ideal state virtually never occurs, the material being tested is still considered "resistant" due to a very slow rate of degradation.

Conditional Chemical Resistance:

The material retains its characteristic properties (see above) for a limited time span acceptable for the purpose or within specific limits of the application conditions.

Chemically Unstable:

The material loses its characteristic properties (see above) within a very short period of time or faster than the intended use allows. For example, some adhesives utilize the chemical instability of plastics towards a solvent by causing the material to partially dissolve in the area of the adhesive area (loss of mechanical strength), thereby allowing the material to mix with both adhesive parts. Once the solvent has evaporated, the adhesive area hardens again, resulting in a strong connection. However, the plastic would be completely unsuitable for building a container for the solvent in question.

For overview tables of chemical resistance of materials, see the following pages ▶

Figure: Use of a chemically-resistant socket combination in the laboratory.

CHEMICAL RESISTANCE

Chemical resistance:	Thermoplastics			Elastomers			Metals		
2 values are specified for each medium left number = value at 20°C right number = value at 50 °C	Polycarbonate PC	Polyamide PA	Polystyrene PS	Ethylene-propylene Terpolymer EPDM	Ffuoro polymer (Viton) FPM/KFM	Nitrile rubber NBR	Aluminum Al	Stainless steel 1.4301 (AISI 304)	Stainless steel 1.4401 (AISI 316)
1. Hydrocarbons									
Hexane, n-	(2)	1/0	4/4	4/4	1/1	1/1	1/1	1/1	1/1
Gasoline, aromatic	3/3	1/0	4/4	4/4	(1-3)	3/0	1/1	1/1	1/1
Heating oil	3/3	1/0	3/4	4/4	1/1	1/1	1/1	1/1	1/1
Benzene	4/4	2/0	4/4	4/4	3/3	4/4	1/1	1/1	1/1
Naphthalene	(3)	1/0	3/4	4/4	1/1	4/4	1/1	1/1	1/1
Nitrobenzene	4/4	4/4	4/4	4/4	4/4	4/4	(1)	1/1	1/1
Toluene	4/4	1/0	4/4	4/4	3/3	4/4	1/1	1/1	1/1
2. Alcohols									
Ethyl alcohol, 40%	1/2	1/0	2/3	1/0	1/0	1/1	1/1	1/1	1/1
Ethyl alcohol, 50%	1/1	1/0	1/0	1/0	(2)	1/1	1/1	1/1	1/1
Ethyl alcohol, 96%	1/3	1/0	3/4	1/0	3/0	3/3	1/1	1/1	1/1
Isopropanol	1/2	1/0	4/4	1/0	1/1	3/3	(2)	(1)	(1)
Phenol 10%	4/4	4/4	4/4	4/4	2/3	4/4	1/1	1/2	1/1
Phenol 100%	4/4	4/4	4/4	4/4	3/0	4/4	1/1	1/2	1/1
Glycol	(2)	(3)	4/4	3/0	4/4	4/4	(1)	(1)	(1)
Ethylene glycol	(2)	(3)	4/4	3/0	4/4	4/4	(1)	(1)	(1)
Glycerol	3/3	1/0	1/1	1/0	1/1	1/0	1/1	1/1	1/1
3. Ketone									
Acetone	4/4	1/0	4/4	1/0	4/4	4/4	1/1	1/1	1/1
Methyl isobutyl ketone	4/4	(2)	4/4	3/0	4/4	4/4	(1)	(1)	(1)
Methyl isopropyl ketone	4/4	(2)	4/4	3/0	4/4	4/4	(1)	(1)	(1)
4. Acids (max. conc.)									
Nitric acid (1-10%)	1/2	4/4	2/4	2/0	1/1	4/4	3/4	1/1	1/1
Nitric acid (50%)	4/4	4/4	4/4	4/4	1/0	4/4	4/4	1/2	1/2
Nitric acid (66%)	4/4	4/4	4/4	4/4	1/0	4/4	4/4	1/2	1/2
Nitric acid (100%)	4/4	4/4	0/0	4/4	4/4	4/4	1/1	2/3	3/3
Nitric acid (70%)	4/4	4/4	4/4	4/4	2/3	4/4	4/4	1/2	1/2
Hydrochloric acid (1-5%)	1/1	4/4	1/1	1/0	1/1	3/4	4/4	4/4	4/4
Hydrochloric acid (35%)	4/4	4/4	3/3	3/0	1/2	4/4	4/4	4/4	4/4
Hydrochloric acid (conc.)	4/4	4/4	3/3	3/0	1/2	4/4	4/4	4/4	4/4
Hydrochloric acid (20%)	2/3	4/4	1/1	1/0	1/1	4/4	4/4	4/4	4/4
Phosphoric acid (30%)	1/0	4/4	1/1	1/0	1/1	3/3	4/4	1/3	1/2
Phosphoric acid (85%)	1/2	4/4	1/2	3/0	1/1	4/4	4/4	2/4	1/3
Phosphoric acid (1-5%)	1/1	(3)	2/2	1/0	1/1	2/3	(4)	1/1	1/1
Phosphoric acid (20%)	(2)	4/4	0/0	1/0	1/1	3/3	4/4	1/3	1/2
Sulfuric acid (40%)	2/0	4/4	2/0	(3)	1/1	4/4	3/4	2/3	2/3
Sulfuric acid (60%)	3/3	4/4	2/4	4/4	1/1	4/4	4/4	4/4	3/4
Sulfuric acid (80%)	3/4	4/4	3/4	4/4	1/1	4/4	4/4	2/4	2/3
Sulfuric acid (95%)	4/4	4/4	4/4	4/4	1/1	4/4	4/4	1/3	1/3
Sulfuric acid (fuming)	4/4	4/4	4/4	4/4	1/0	4/4	(3)	1/2	1/1
Sulfuric acid (1-6%)	1/1	4/4	1/2	1/0	1/1	3/0	(3)	2/2	1/2
Sulfuric acid (20%)	1/2	4/4	1/2	2/0	1/1	4/4	(3)	2/3	2/3
Citric acid (10%)	1/2	1/1	1/2	1/0	1/1	1/1	1/0	1/1	1/1
Citric acid (50%)	1/0	3/0	1/0	1/0	(1)	1/1	1/0	1/3	1/2
Citric acid (saturated)	1/0	3/0	1/1	1/0	(1)	1/1	1/0	1/3	1/2
Lactic acid (3%)	1/0	1/2	2/2	3/4	1/1	(2)	(1)	1/1	1/1
Lactic acid (80%)	0/0	1/2	1/1	3/4	1/1	1/4	1/0	1/3	1/2
Lactic acid (85%)	0/0	1/2	2/2	3/4	1/1	1/4	1/0	1/3	1/2
Acetic acid (50%)	1/2	4/4	2/2	4/4	4/4	4/4	1/3	1/1	1/1
Acetic acid (100%)	4/4	4/4	0/0	4/4	4/4	4/4	1/3	1/2	1/2
Acetic acid (90%)	4/4	4/4	4/4	4/4	4/4	4/4	1/3	1/2	1/2
Acetic acid (10%)	1/2	4/4	1/1	(2)	(3)	3/3	1/3	1/1	1/1
Acetic acid (5%)	1/2	4/4	1/1	1/0	3/3	3/3	1/3	1/2	1/1
Oleic acid (technically pure)	1/0	1/0	1/3	4/4	2/2	3/0	1/1	1/1	1/1

Chemical resistance:	Thermoplastics			Elastomers			Metals		
	Polycarbonate PC	Polyamide PA	Polystyrene PS	Ethylene-propylene Terpolymer EPDM	Ffuoro polymer (Viton) FPM/KFM	Nitrile rubber NBR	Aluminum Al	Stainless steel 1.4301 (AISI 304)	Stainless steel 1.4401 (AISI 316)
5. Bases									
Aniline	4/4	3/4	4/4	4/4	2/4	4/4	1/0	1/0	1/0
Sodium hydroxide solution (conc.)	4/4	1/3	0/0	1/0	4/4	3/4	4/4	(2)	1/3
Sodium hydroxide solution (30%)	4/4	1/0	1/0	1/0	(3)	2/3	4/4	1/3	1/3
Sodium hydroxide solution (45%)	4/4	1/0	1/1	1/0	2/4	2/3	4/4	1/3	1/3
Sodium hydroxide solution (50%)	4/4	1/0	2/2	1/0	3/4	3/3	4/4	1/3	1/3
Sodium hydroxide solution (60%)	4/4	1/0	1/0	1/0	3/4	2/3	4/4	1/3	1/3
Sodium hydroxide solution (41%)	4/4	1/0	2/2	1/0	1/1	1/3	(4)	1/1	1/1
Ammonium hydroxide	1/1	1/1	2/2	1/0	1/1	1/3	(4)	1/1	1/1
6. Halogens									
Bromine	4/4	4/4	4/4	4/4	(2-4)	4/4	(4)	4/4	4/4
Chlorine (10%) wet	2/3	4/4	4/4	2/0	3/0	4/4	4/4	4/4	4/4
Chlorine (97%)	4/4	4/4	4/4	4/4	1/1	4/4	(3)	1/0	1/0
Tincture of iodine	3/4	4/4	3/3	2/0	1/1	3/3	1/0	2/0L	1/0L
7. Oils, greases									
Soybean oil	(1)	(2)	0/0	4/4	1/1	1/0	(1)	1/1	1/1
Olive oil	(2)	(2)	1/1	4/4	1/1	1/1	1/1	1/1	1/1
Vegetable oils	(2)	0/0	0/0	4/4	1/0	1/0	(1)	1/1	1/1
8. Saline solutions									
Potassium carbonate, saturated	3/3	1/1	1/1	1/0	1/0	1/1	4/4	1/1	1/1
Calcium carbonate, aqueous	1/0	1/1	0/0	1/0	1/0	1/1	4/4	1/1	1/1
Sodium thiosulfate, any	(2)	1/0	0/0	1/0	1/0	3/3	1/1	1/1	1/1
Sodium thiosulfate, saturated	(1)	1/0	1/1	1/0	1/1	2/3	1/1	1/1	1/1
Sodium thiosulfate, aqueous	(1)	1/0	0/0	1/0	1/1	1/0	1/1	1/1	1/1
Sodium hypochlorite, diluted	(3)	4/4	1/3	3/0	1/3	4/4	4/4	3/3	L2/2L
Sodium hypochlorite (15%)	2/3	4/4	1/3	3/0	1/3	4/4	4/4	3/3L	2/2L
Sodium hypochlorite, saturated	2/3	4/4	1/3	3/0	1/3	4/4	4/4	3/3L	2/2L
Sodium hypochlorite (12.5%) CL	2/3	4/4	1/3	3/0	1/3	4/4	4/4	3/3L	2/2L
Sea water	1/1	1/0	1/1	1/1	1/1	1/1	3/4	1/3L	1/2L
9. Cleaning agents									
Soap solution, every	(2)	4/4	0/0	1/0	1/1	1/1	(3)	1/1	1/1
Washing detergent, e.g. Persil	1/0	1/1	0/0	1/0	1/1	(2)	1/1	1/1	1/1
Surfactants, wetting agents (5%)	(2)	(2)	0/0	(2)	(2)	(2)	0/0	K	K
10. Other media									
Diethyl ether, ethyl ether techn. pure	4/4	1/1	4/4	4/4	4/4	4/4	1/1	1/1	1/1
Urea, aqueous	1/1	1/0	0/0	1/0	1/1	1/1	1/1	1/0	1/0
Urea	1/1	1/0	1/2	1/0	1/1	1/1	1/1	1/0	1/0
Trichloroethylene, 100%	4/4	3/0	4/4	4/4	1/3	4/4	1/3	1/1L	1/1L
Hydrogen peroxide (30%)	4/4	1/2	1/2	3/0	1/1	4/4	(3)	1/1	1/1
Hydrogen peroxide (100%)	4/4	1/4	4/4	(3)	(2)	4/4	(3)	(1)	(1)
hydrogen peroxide (90%)	4/4	1/2	1/2	3/0	1/3	4/4	(3)	1/1	1/1
Hydrogen peroxide (3%)	(3)	1/1	1/2	1/0	1/0	4/4	(3)	1/1	1/1

LEGEND

No information available / no statement possible	0
Very good resistance / suitable	1
Good resistance / suitable	2
Limited resistance	3
Not resistant	4
No general information possible	K
Danger of pitting or stress cracking corrosion	L
Estimated value	()

In countries where series II devices are used, the color orange is reserved for devices for 125/250 V~ and the color gray is reserved for devices for 277 V~.

In general, CEE plugs and sockets can be plugged and disconnected under load. However, interrupting the circuit can lead to a switch arc between the male and female contacts. This can not only lead to an increased wear of the contacts, but also be a potential danger for people. That is why a pilot contact can optionally be provided for a current of 63 A or more. The pilot contact is shorter than all the other contacts and therefore interrupts the system's control circuit first when pulled under load, ensuring the load is shut down. The load circuit is thus shut down before the contacts shut it down.

However, it is also possible to plug and pull the CEE plugs and sockets while the contacts are under load. The plugs and sockets also have sufficient switching capacity to be able to switch load currents. The testing occurs according to the standard IEC/EN 60 309-1. Testing is carried out at 1.1-times the rated voltage, 1.25-times the rated current, the cos phi table 6, with a pull-off speed of 0.8 ± 0.1 m/s at 7.5 position changes per minute. After testing, no further damage that impairs further use may be visible.

Switching capacity

Rated current A			Number of cycles		
Preferred rated values		Other rated values	AC		DC
Series I	Series II	Range	cos φ ±0.05	under load	under load
16	20	up to 29	0.6	50	50
32	30	30 to 59	0.6	50	50
63	60	60 to 99	0.6	20	20
125	100	100 to 199	0.7	20	20

Source: IEC/EN 60 309-1, table 6

Plugs and sockets that do not pass the test for switching capacity and behavior in use must have a locking mechanism. Locking mechanisms must interact with the control gear so that the plug can neither be withdrawn from the socket or the coupler while the contacts remain under voltage nor inserted while the control gear is switched on. You can distinguish between two versions:

1. Mechanical locking mechanism
Sockets with a switch. The control gear installed must have a switching capacity according to the use category AC 22 A IEC/EN 60 947-3 table 2. Sockets for DC voltage must be equipped with a switching device suitable for its use. CEEtyp wall sockets have a dual locking mechanism, which means the switch can only be inserted once the plug is inserted in the socket.

2. Electrical locking mechanism
The pre-mating/lagging pilot contact when connecting the plug for 63 A and when withdrawing the plug for 125 A actuates a controlgear, thereby preventing a connection or disconnection when voltage is present. The built-in controlgear must at minimum have the switching capacity of the switching capacity-tested plugs and sockets and pass the "behavior in use."

Plugs and sockets must withstand the mechanical, electric and thermal stresses occurring during proper use without extraordinary wear or other harmful impacts. The testing is done in accordance to the IEC/EN 60309-1, table 7 standard and is carried out at rated voltage and rated current.

Behavior in use

Rated current A			Number of cycles at 7.5 position changes per minute				
Preferred rated values		Other rated values	AC			DC Induction-free	
Series I	Series II	Range	cos φ ±0.05	under load	without load	under load	without load
16	20	up to 29	0.6	5000	-	5000	-
32	30	30 to 59	0.6	1000	1000	1000	1000
63	60	60 to 99	0.6	1000	1000	500	500
125	100	100 to 199	0.7	250	250	250	250

Source: IEC/EN 60 309-1, table 7

Power supply systems according to the ground connection

Extract from DIN VDE 0100-100:2009-06

The abbreviations used have the following meanings:

First letter:
Relation of the power supply system to the earth

T Direct connection on a point to the earth
I Either all active parts are separated from the earth or a point is connected to earth via a high impedance.

Second letter:
Relationship of body (from electric equipment) of the electrical system to earth:

T Direct electrical connection of the body (of electrical equipment) to earth, regardless of any existing earthing of a point of the supply system

N Direct electrical connection of the body (of electrical equipment) with the earthed point of the power supply system (in alternating current systems, the earthed point of the power supply system in general is the neutral point or, if a neutral point is not present, an external conductor)

Other letters (if present):
Arrangement of the neutral conductor and the protective conductor

S Protective function provided by a conductor separated from the neutral conductor or from the earthed external conductor
C Neutral conductor and protective conductor function, combined in a single conductor (PEN conductor)

Explanation of symbols according to DIN EN 60617	
	Neutral conductor (N): mid-point conductor (M)
	Protective conductor (PE)
	Combined protective and neutral conductor (PEN)

Source: DIN / VDE 0100-100:2009-06

TN systems (3 different types)

In the TN supply system, a point is earthed directly. Electrical operating equipment of the electrical system is connected to this point via protective conductors.

TN-S system

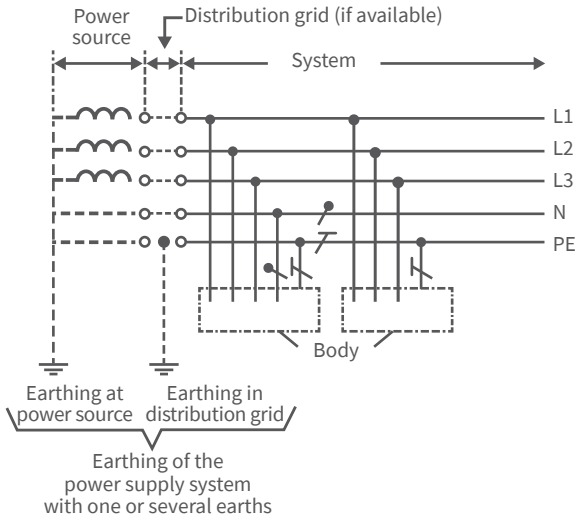

This type of grid is safer than the TN-C system. The problems which can result from an interrupted neutral conductor do not occur here. The protective measure is still guaranteed, however, the application is not used too often.

TN-C systems

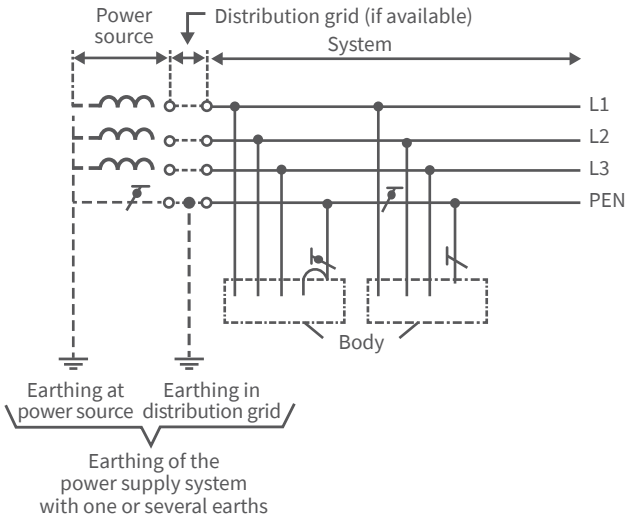

The TNC grid is the standard type of network for distributing electricity to the end consumer. It is realized at the last transformer that produces the 400 V level. It is then routed to the meter panel in the domestic connection box, where it is separated into a TNS grid with separate new protective conductors.

TN-C-S systems

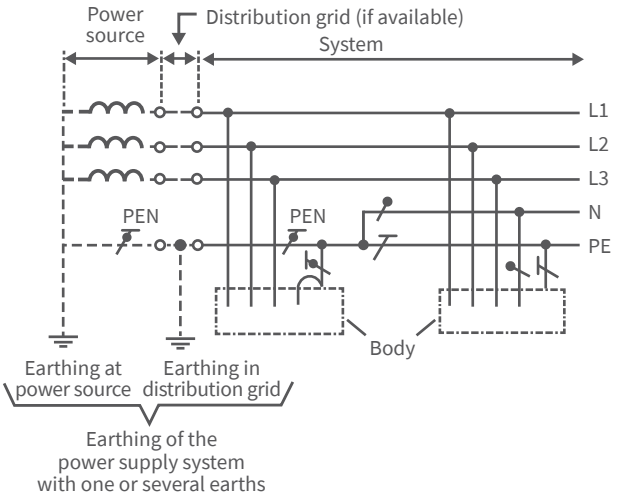

For example, this system is widely used for home power supply systems in Germany. The separation of protective conductors and neutral conductors usually occurs in the switch cabinet.

Grid types

TT systems

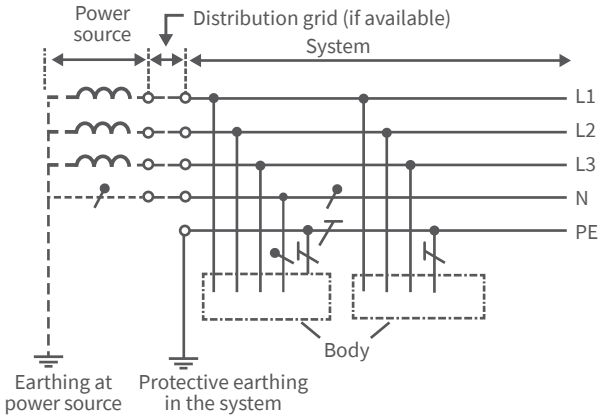

In the TT supply system, only one point is earthed directly and the electric operating equipment of the electrical system is connected with earths, which are independent of the earth supply system. The neutral conductor does not have a protective function. The user must have its own earth where the protective ground can be realized. The earth transition resistance are therefore very low and difficult to reach. With trains, it often has to be operated to avoid feedback effects from the 162/3Hz grid on the 50 Hz grid. Due to the problematic earthing conditions, the protective measure to earth is limited to 6-A circuits. If you want stronger circuit protection you must rely on the residual current protection circuit. The tripping current of the residual current circuit also depends on the earthing conditions.

IT system

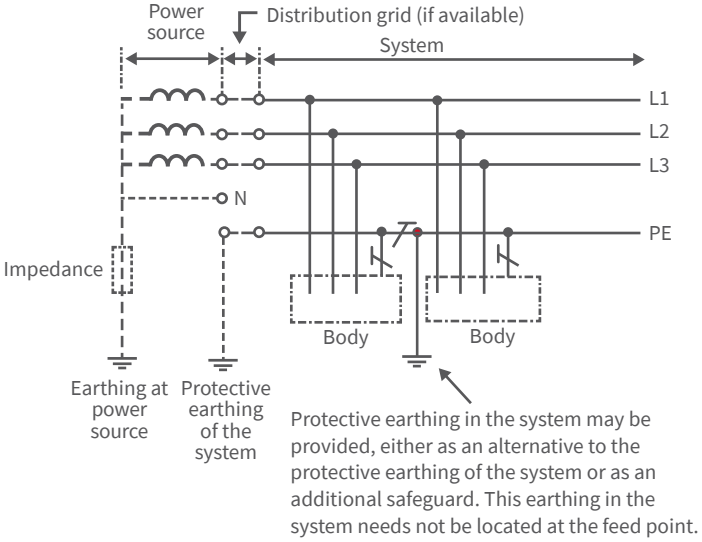

In the IT supply system, all active parts are separated from the earth or a point is connected to earth via a high impedance. The electrical operating equipment of the electrical system is either earthed individually, earthed together, or is connected together with the system earthing. For example, this type of grid is used in workshops for systems and vehicles to be repaired, so that no accident occurs in the event of the first fault. They are also used in hospitals and on ships because of their increased reliability. The three-phase current systems for auxiliary operations of Deutsche Bahn locomotives also work with an IT grid so that train travel can still be terminated in the event of a fault.


Walther
16A-6h
230/400V~
Type
210
IP44

WALTHER item number system

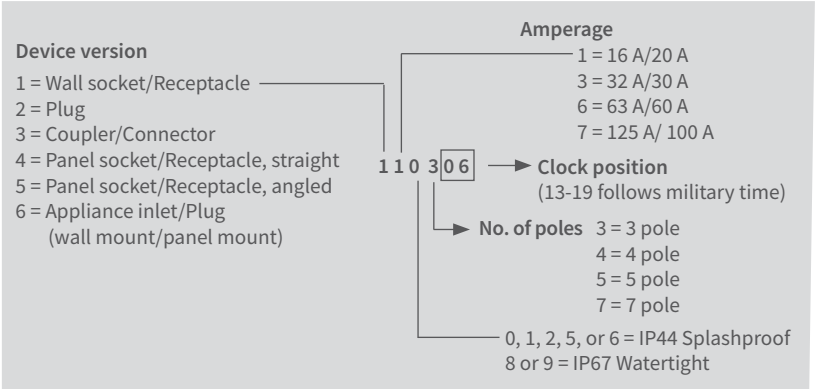

The last 3 digits are omitted for standard devices in the 5-pole 6-h position design under International Ratings.

Other numbers are item-specific.

Military Time follows the 24-hour clock
1 o'clock would be 01 or 13
7 o'clock would be 07 or 19
12 o'clock would be 12 or 24

Approvals

A distinction is made between three different approval tests worldwide:

National test:
An electro-technical device is set up for testing in just one country and may only bare the test mark of the respective country after passing the test.

European test:
The national testing authorities of the European countries have founded a European Committee for Electrotechnical Standardization called CENELEC (Comité Européen de Normalisation Electrotechnique).
Compliant with the Low Voltage Directive: All member states are required to convert the standards (European Standards (EN)) developed from CENELEC into national standards without amendment. This applies to Belgium, Denmark, Germany, Finland, France, Greece, Ireland, Italy, Luxembourg, the Netherlands, Norway, Austria, Portugal, Sweden, Switzerland, Spain and the United Kingdom. Once the test has been passed according to EN standards in one of the aforementioned countries, a CCA test report is created that can be used in each country to apply for the corresponding national test mark.

Globally applicable test:
All countries in the world have an interest in producing goods that are as interchangeable as possible due to the close trade relations. This is why the IEC (IEC = International Electrotechnical Commission) was constituted. The commission develops IEC standards that countries that are members of the IEC use for testing. After the testing is passed, a CB test report is created that can also be used to apply for the national test mark.

Compliant with the
Low Voltage Directive

WALTHER products have the most important test marks worldwide.

USA | USA / Canada | Germany/Europe | China | Russia

MALE PLUGS

				DUST TIGHT IP67 WATERTIGHT	IP44 SPLASH PROOF		
UL LISTED		CSA CERTIFIED		with Trumpet/ Bell Gland	with Trumpet/ Bell Gland	with Flexible Cable Sleeve	Angled 90°
Poles	Number of Wires (N =Neutral / G = Ground)	Voltage AC (Except where noted)	Clock Position of Ground Contact	 218409	 211306	 210306	 216306
3	2P + G	250 DC	03	219315	211315	210315	216315
	1P + N + G	125	04	219316	211316	210316	216316
	2P + G	250	06	219306	211306	210306	216306
	1P + N + G	277	05	219317	211317	210317	216317
	2P + G	480	07	219319	211319	210319	216319
4	2P + N + G	125/250	12	218424	212424	210424	216424
	3P + G	3ø250	09	218409	212409	210409	216409
	3P + G	3ø480	07	218419	212419	210419	216419
	3P + G	3ø600	05	218405	212405	210405	216405
5	3P + N + G	Barge Overflow*	01	218501BL*	–	–	–
	3P + N + G	3øY120/208	09	218509	212509	210509	216509
	3P + N + G	3øY277/480	07	218519	212519	210519	216519
	3P + N + G	3ø347/600	05	218505	212505	210505	216505
7	6P + G	250	09	–	212709	210709	–
	6P + G	480	07	–	212719	210719	–

** BL devices are US Coast Guard required as per 46CFR Ch. 1, 39.20-9*
NOTE: Part numbers with a light gray background have not been UL Listed or CSA Certified. Speak with a member of our sales team to learn more.

FEMALE CONNECTORS (Couplers)

				DUST TIGHT IP67 WATERTIGHT	IP44 SPLASH PROOF		
UL LISTED		CSA CERTIFIED		with Trumpet/ Bell Gland	with Trumpet/ Bell Gland	with Flexible Cable Sleeve	Angled 90°
Poles	Number of Wires (N =Neutral / G = Ground)	Voltage AC (Except where noted)	Clock Position of Ground Contact	 318409	 311306	 310306	 316306
3	2P + G	250 DC	03	319315	311315	310315	316315
	1P + N + G	125	04	319316	311316	310316	316316
	2P + G	250	06	319306	311306	310306	316306
	1P + N + G	277	05	319317	311317	310317	316317
	2P + G	480	07	319319	311319	310319	316319
4	2P + N + G	125/250	12	318424	312424	310424	–
	3P + G	3ø250	09	318409	312409	310409	–
	3P + G	3ø480	07	318419	312419	310419	–
	3P + G	3ø600	05	318405	312405	310405	–
5	3P + N + G	Barge Overflow*	01	318501BL*	–	–	–
	3P + N + G	3øY120/208	09	318509	312509	310509	–
	3P + N + G	3øY277/480	07	318519	312519	310519	–
	3P + N + G	3ø347/600	05	318505	312505	310505	–
7	6P + G	250	09	–	312709	310709	–
	6P + G	480	07	–	312719	310719	–

** BL devices are US Coast Guard required as per 46CFR Ch. 1, 39.20-9*
NOTE: Part numbers with a light gray background have not been UL Listed or CSA Certified. Speak with a member of our sales team to learn more.

1
2
3
4
5
6
7
8
9
10
11

FEMALE RECEPTACLES
(Panel Sockets)

UL LISTED CSA CERTIFIED

				DUST TIGHT IP67 WATERTIGHT			IP44 SPLASH PROOF		
				Straight	Angled 15°	Angled 80°	Straight	Angled 15°	Angled 80°
Poles	Number of Wires (N =Neutral / G = Ground)	Voltage AC (Except where noted)	Clock Position of Ground Contact	 419306	 519306	 518306	 410306	 510306	 514306
3	2P + G	250 DC ⊣|+−	03	419315	519315	518315	410315	510315	514315
	1P + N + G	125	04	419316	519316	518316	410316	510316	514316
	2P + G	250	06	419306	519306	518306	410306	510306	514306
	1P + N + G	277	05	419317	519317	518317	410317	510317	514317
	2P + G	480	07	419319	519319	518319	410319	510319	514319
4	2P + N + G	125/250	12	419424	519424	518424	410424	510424	514424
	3P + G	3ø250	09	419409	519409	518409	410409	510409	514409
	3P + G	3ø480	07	419419	519419	518419	410419	510419	514419
	3P + G	3ø600	05	419405	519405	518405	410405	510405	514405
5	3P + N + G	Barge Overflow*	01	419501BL*	519501BL*	518501BL*	–	–	–
	3P + N + G	3øY120/208	09	419509	519509	518509	410509	510509	514509
	3P + N + G	3øY277/480	07	419519	519519	518519	410519	510519	514519
	3P + N + G	3ø347/600	05	419505	519505	518505	410505	510505	514505
7	6P + G	250	09	–	–	–	411709	–	514709
	6P + G	480	07	–	–	–	411719	–	514719

** BL devices are US Coast Guard required as per 46CFR Ch. 1, 39.20-9*
NOTE: Part numbers with a light gray background have not been UL Listed or CSA Certified. Speak with a member of our sales team to learn more.

MALE INLETS
(Appliance Plugs)

UL LISTED CSA CERTIFIED

				DUST TIGHT IP67 WATERTIGHT		IP44 SPLASH PROOF		
				Angled 80°	Surface Mount	Straight	Angled 80°	Surface Mount
Poles	Number of Wires (N =Neutral / G = Ground)	Voltage AC (Except where noted)	Clock Position of Ground Contact	 619306	 618306	 615306	 611306	 616409
3	2P + G	250 DC ⊣|+−	03	619315	618315	615315	611315	–
	1P + N + G	125	04	619316	619306	615316	611316	–
	2P + G	250	06	619306	618306	615306	611306	–
	1P + N + G	277	05	619317	618317	615317	611317	–
	2P + G	480	07	619319	618319	615319	611319	–
4	2P + N + G	125/250	12	619424	618424	615424	611424	616424
	3P + G	3ø250	09	619409	618409	615409	611409	616409
	3P + G	3ø480	07	619419	618419	615419	611419	616419
	3P + G	3ø600	05	619405	618405	615405	611405	616405
5	3P + N + G	Barge Overflow*	01	619501BL*	618501BL*	–	–	–
	3P + N + G	3øY120/208	09	619509	618509	615509	611509	616509
	3P + N + G	3øY277/480	07	619519	618519	615519	611519	616519
	3P + N + G	3ø347/600	05	619505	618505	615505	611505	616505
7	6P + G	250	09	–	–	615709	611709	616709
	6P + G	480	07	–	–	615719	611719	616719

** BL devices are US Coast Guard required as per 46CFR Ch. 1, 39.20-9*
NOTE: Part numbers with a light gray background have not been UL Listed or CSA Certified. Speak with a member of our sales team to learn more.

MALE PLUGS

				DUST TIGHT IP67 WATERTIGHT		IP44 SPLASH PROOF		
		UL LISTED / CSA CERTIFIED		with Exterior Cable Gland	with Trumpet/ Bell Gland	with Exterior Cable Gland	with Trumpet/ Bell Gland	Angled 90°
Poles	Number of Wires (N =Neutral / G = Ground)	Voltage AC (Except where noted)	Clock Position of Ground Contact	 239306	 238409	 230306	 231306	 236306
3	2P + G	250 DC ⊣⊢	03	239315	–	230315	231315	236315
	1P + N + G	125	04	239316	–	230316	231316	236316
	2P + G	250	06	239306	–	230306	231306	236306
	1P + N + G	277	05	239317	–	230317	231317	236317
	2P + G	480	07	239319	–	230319	231319	236319
4	2P + N + G	125/250	12	–	238424	230424	232424	236424
	3P + G	3ø250	09	–	238409	230409	232409	236409
	3P + G	380/440*	03	–	238403*	–	–	–
	3P + G	3ø480	07	–	238419	230419	232419	236419
	3P + G	3ø600	05	–	238405	230405	232405	236405
5	3P + N + G	50-600 400Hz	02	–	238502	230502	232502	236502
	3P + N + G	3øY120/208	09	–	238509	230509	232509	236509
	3P + N + G	400	06	–	238	–	232	–
	3P + N + G	3øY277/480	07	–	238519	230519	232519	236519
	3P + N + G	3ø347/600	05	–	238505	230505	232505	236505
7	6P + G	250	09	–	–	230709	232709	–
	6P + G	480	07	–	–	230719	232719	–

** Only for refridgerated containers. Supplied with Stainless steel assembly screws and friction ring*
NOTE: Part numbers with a light gray background have not been UL Listed or CSA Certified. Speak with a member of our sales team to learn more.
NOTE: For 30A 5 Wire applications – If the design calls for 5C/8AWG, the 238 series trumpet/bell gland back shell MUST be used .

FEMALE CONNECTORS (Couplers)

				DUST TIGHT IP67 WATERTIGHT		IP44 SPLASH PROOF	
		UL LISTED / CSA CERTIFIED		with Exterior Cable Gland	with Trumpet/ Bell Gland	with Exterior Cable Gland	with Trumpet/ Bell Gland
Poles	Number of Wires (N =Neutral / G = Ground)	Voltage AC (Except where noted)	Clock Position of Ground Contact	 339306	 338409	 330306	 331306
3	2P + G	250 DC ⊣⊢	03	339315	–	330315	331315
	1P + N + G	125	04	339316	–	330316	331316
	2P + G	250	06	339306	–	330306	331306
	1P + N + G	277	05	339317	–	330317	331317
	2P + G	480	07	339319	–	330319	331319
4	2P + N + G	125/250	12	–	338424	330424	332424
	3P + G	3ø250	09	–	338409	330409	332409
	3P + G	380/440*	03	–	338403*	–	–
	3P + G	3ø480	07	–	338419	330419	332419
	3P + G	3ø600	05	–	338405	330405	332405
5	3P + N + G	50-600 400Hz	02	–	338502	330502	332502
	3P + N + G	3øY120/208	09	–	338509	330509	332509
	3P + N + G	400	06	–	338	–	332
	3P + N + G	3øY277/480	07	–	338519	330519	332519
	3P + N + G	3ø347/600	05	–	338505	330505	332505
7	6P + G	250	09	–	–	330709	332709
	6P + G	480	07	–	–	330719	332719

** Only for refridgerated containers. Supplied with Stainless steel assembly screws and friction ring*
NOTE: Part numbers with a light gray background have not been UL Listed or CSA Certified. Speak with a member of our sales team to learn more.

FEMALE RECEPTACLES
(Panel Sockets)

UL LISTED CSA CERTIFIED

Poles	Number of Wires (N =Neutral / G = Ground)	Voltage AC (Except where noted)	Clock Position of Ground Contact	DUST TIGHT IP67 WATERTIGHT Straight	Angled 15°	Angled 80°	IP44 SPLASH PROOF Straight	Angled 15°	Angled 80°
				 439306	 539306	 538306	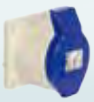 430306	 530306	 534306
3	2P + G	250 DC ⊣|±	03	439315	539315	538315	430315	530315	534315
	1P + N + G	125	04	439316	539316	538316	430316	530316	534316
	2P + G	250	06	439306	539306	538306	430306	530306	534306
	1P + N + G	277	05	439317	539317	538317	430317	530317	534317
	2P + G	480	07	439319	539319	538319	430319	530319	534319
4	2P + N + G	125/250	12	439424	539424	538424	430424	530424	534424
	3P + G	3ø250	09	439409	539409	538409	430409	530409	534409
	3P + G	380/440*	03	439403*	–	–	–	–	–
	3P + G	3ø480	07	439419	539419	538419	430419	530419	534419
	3P + G	3ø600	05	439405	539405	538405	430405	530405	534405
5	3P + N + G	50-600 400Hz	02	439502	539502	538502	430502	530502	534502
	3P + N + G	3øY120/208	09	439509	539509	538509	430509	530509	534509
	3P + N + G	3øY277/480	07	439519	539519	538519	430519	530519	534519
	3P + N + G	3ø347/600	05	439505	539505	538505	430505	530505	534505
7	6P + G	250	09	–	–	–	431709	–	534709
	6P + G	480	07	–	–	–	431719	–	534719

** Only for refridgerated containers.*
NOTE: See pages 44 and 46 for surface mount receptacles and back boxes
NOTE: Part numbers with a light gray background have not been UL Listed or CSA Certified. Speak with a member of our sales team to learn more.

MALE INLETS
(Appliance Plugs)

UL LISTED CSA CERTIFIED

Poles	Number of Wires (N =Neutral / G = Ground)	Voltage AC (Except where noted)	Clock Position of Ground Contact	DUST TIGHT IP67 WATERTIGHT Angled 80°	Surface Mount	IP44 SPLASH PROOF Straight	Angled 80°	Surface Mount
				 639306	 638306	 635306	 631306	 636306
3	2P + G	250 DC ⊣|±	03	639315	638315	635315	631315	636315
	1P + N + G	125	04	639316	638316	635316	631316	636316
	2P + G	250	06	639306	638306	635306	631306	636306
	1P + N + G	277	05	639317	638317	635317	631317	636317
	2P + G	480	07	639319	638319	635319	631319	636319
4	2P + N + G	125/250	12	639424	638424	635424	631424	636424
	3P + G	3ø250	09	639409	638409	635409	631409	636409
	3P + G	380/440*	03	639403*	638403*	–	–	–
	3P + G	3ø480	07	639419	638419	635419	631419	636419
	3P + G	3ø600	05	639405	638405	635405	631405	636405
5	3P + N + G	50-600 400Hz	02	639502	638502	635502	631502	636502
	3P + N + G	3øY120/208	09	639509	638509	635509	631509	636509
	3P + N + G	3øY277/480	07	639519	638519	635519	631519	636519
	3P + N + G	3ø347/600	05	639505	638505	635505	631505	636505
7	6P + G	250	09	–	–	635709	631709	636709
	6P + G	480	07	–	–	635719	631719	636719

** Only for refridgerated containers.*
NOTE: Part numbers with a light gray background have not been UL Listed or CSA Certified. Speak with a member of our sales team to learn more.

MALE PLUGS

				DUST TIGHT IP67 WATERTIGHT	IP44 SPLASH PROOF	
UL LISTED		CSA CERTIFIED		with Trumpet/ Bell Gland	with Exterior Cable Gland	with Trumpet/ Bell Gland
Poles	Number of Wires (N =Neutral / G = Ground)	Voltage AC (Except where noted)	Clock Position of Ground Contact	 269306	 260306	 261306
3	2P + G	250 DC ⊣|+⊢	03	269315	260315	261315
	1P + N + G	125	04	269316	260316	261316
	2P + G	250	06	269306	260306	261306
	1P + N + G	277	05	269317	260317	261317
	2P + G	480	07	269319	260319	261319
4	2P + N + G	125/250	12	269424	260424	261424
	3P + G	3Ø250	09	269409	260409	261409
	3P + G	3Ø480	07	269419	260419	261419
	3P + G	3Ø600	05	269405	260405	261405
5	3P + N + G	50-600 400Hz	02	269502	260502	261502
	3P + N + G	3ØY120/208	09	269509	260509	261509
	3P + N + G	3ØY277/480	07	269519	260519	261519
	3P + N + G	3ØY347/600	05	269505	260505	261505

NOTE: Part numbers with a light gray background have not been UL Listed or CSA Certified. Speak with a member of our sales team to learn more.

FEMALE CONNECTORS (Couplers)

				DUST TIGHT IP67 WATERTIGHT	IP44 SPLASH PROOF	
UL LISTED		CSA CERTIFIED		with Trumpet/ Bell Gland	with Exterior Cable Gland	with Trumpet/ Bell Gland
Poles	Number of Wires (N =Neutral / G = Ground)	Voltage AC (Except where noted)	Clock Position of Ground Contact	 369306	 360306	 361306
3	2P + G	250 DC ⊣|+⊢	03	369315	360315	361315
	1P + N + G	125	04	369316	360316	361316
	2P + G	250	06	369306	360306	361306
	1P + N + G	277	05	369317	360317	361317
	2P + G	480	07	369319	360319	361319
4	2P + N + G	125/250	12	369424	360424	361424
	3P + G	3Ø250	09	369409	360409	361409
	3P + G	3Ø480	07	369419	360419	361419
	3P + G	3Ø600	05	369405	360405	361405
5	3P + N + G	50-600 400Hz	02	369502	360502	361502
	3P + N + G	3ØY120/208	09	369509	360509	361509
	3P + N + G	3ØY277/480	07	369519	360519	361519
	3P + N + G	3ØY347/600	05	369505	360505	361505

1 2 3 4 5 6 7 8 9 10 11

FEMALE RECEPTACLES
(Panel Sockets)

UL LISTED CSA CERTIFIED

				DUST TIGHT IP67 WATERTIGHT			IP44 SPLASH PROOF		
				Straight	Angled 15°	Angled 80°	Straight	Angled 15°	Angled 80°
Poles	Number of Wires (N =Neutral / G = Ground)	Voltage AC (Except where noted)d	Clock Position of Ground Contact	 469306	 569306	 568306	 460306	 560306	 564306
3	2P + G	250 DC	03	469315	569315	568315	460315	560315	564315
	1P + N + G	125	04	469316	569316	568316	460316	560316	564316
	2P + G	250	06	469306	569306	568306	460306	560306	564306
	1P + N + G	277	05	469317	569317	568317	460317	560317	564317
	2P + G	480	07	469319	569319	568319	460319	560319	564319
4	2P + N + G	125/250	12	469424	569424	568424	460424	560424	564424
	3P + G	3Ø250	09	469409	569409	568409	460409	560409	564409
	3P + G	3Ø480	07	469419	569419	568419	460419	560419	564419
	3P + G	3Ø600	05	469405	569405	568405	460405	560405	564405
5	3P + N + G	50-600 400Hz	02	469502	569509	568502	460502	560502	564502
	3P + N + G	3ØY120/208	09	469509	569502	568509	460509	560509	564509
	3P + N + G	3ØY277/480	07	469519	569519	568519	460519	560519	564519
	3P + N + G	3ØY347/600	05	469505	569505	568505	460505	560505	564505

NOTE: See pages 44 and 46 for surface mount receptacles and back boxes.

MALE INLETS
(Appliance Plugs)

UL LISTED CSA CERTIFIED

				DUST TIGHT IP67 WATERTIGHT		IP44 SPLASH PROOF	
				Angled 80°	Surface Mount	Straight	Angled 80°
Poles	Number of Wires (N =Neutral / G = Ground)	Voltage AC (Except where noted)	Clock Position of Ground Contact	 669306	 668306	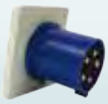 665509	 661306
3	2P + G	250 DC	03	669315	668315	–	661315
	1P + N + G	125	04	669316	668316	–	661316
	2P + G	250	06	669306	668306	665306	661306
	1P + N + G	277	05	669317	668317	–	661317
	2P + G	480	07	669319	668319	–	661319
4	2P + N + G	125/250	12	669424	668424	–	661424
	3P + G	3Ø250	09	669409	668409	665409	661409
	3P + G	3Ø480	07	669419	668419	–	661419
	3P + G	3Ø600	05	669405	668405	–	661405
5	3P + N + G	50-600 400Hz	02	669502	668502	665502	661502
	3P + N + G	3ØY120/208	09	669509	668509	665509	661509
	3P + N + G	3ØY277/480	07	669519	668519	665519	661519
	3P + N + G	3ØY347/600	05	669505	668505	665505	661505

NOTE: Part numbers with a light gray background have not been UL Listed or CSA Certified. Speak with a member of our sales team to learn more.

MALE PLUGS

DUST TIGHT IP67 WATERTIGHT

UL LISTED CSA CERTIFIED

with Trumpet/ Bell Gland

279318

Poles	Number of Wires (N =Neutral / G = Ground)	Voltage AC (Except where noted)	Clock Position of Ground Contact	
3	2P + G	250 DC ⊣|+⊢	03	279315
	1P + N + G	125	04	279316
	2P + G	250	06	279318
	1P + N + G	277	05	279317
	2P + G	480	07	279319
4	2P + N + G	125/250	12	279424
	3P + G	3Ø250	09	279421
	3P + G	3Ø480	07	279419
	3P + G	3Ø600	05	279417
5	3P + N + G	3ØY120/208	09	279521
	3P + N + G	3ØY277/480	07	279519
	3P + N + G	3ØY347/600	05	279517

NOTE: 100 Amp devices are only available in IP67 Watertight configurations.

FEMALE CONNECTORS (Couplers)

DUST TIGHT IP67 WATERTIGHT

UL LISTED CSA CERTIFIED

with Trumpet/ Bell Gland

379318

Poles	Number of Wires (N =Neutral / G = Ground)	Voltage AC (Except where noted)	Clock Position of Ground Contact	
3	2P + G	250 DC ⊣|+⊢	03	379315
	1P + N + G	125	04	379316
	2P + G	250	06	379318
	1P + N + G	277	05	379317
	2P + G	480	07	379319
4	2P + N + G	125/250	12	379424
	3P + G	3Ø250	09	379421
	3P + G	3Ø480	07	379419
	3P + G	3Ø600	05	379417
5	3P + N + G	3ØY120/208	09	379521
	3P + N + G	3ØY277/480	07	379519
	3P + N + G	3ØY347/600	05	379517

NOTE: 100 Amp devices are only available in IP67 Watertight configurations.

CABLE ASSEMBLIES
designed & manufactured
to project specifications

custserv@waltherelectric.com

FEMALE RECEPTACLES
(Panel Sockets)

DUST TIGHT IP67 WATERTIGHT

UL LISTED CSA CERTIFIED

Poles	Number of Wires (N =Neutral / G = Ground)	Voltage AC (Except where noted)	Clock Position of Ground Contact	Straight  479318	Angled 15°  579421
3	2P + G	250 DC	03	479315	579315
	1P + N + G	125	04	479316	579316
	2P + G	250	06	479318	579318
	1P + N + G	277	05	479317	579317
	2P + G	480	07	479319	579319
4	2P + N + G	125/250	12	479424	579424
	3P + G	3Ø250	09	479421	579421
	3P + G	3Ø480	07	479419	579419
	3P + G	3Ø600	05	479417	579417
5	3P + N + G	3ØY120/208	09	479521	579521
	3P + N + G	3ØY277/480	07	479519	579519
	3P + N + G	3ØY347/600	05	479517	579517

NOTE: See pages 44 and 46 for surface mount receptacles and back boxes.

MALE INLETS
(Appliance Plugs)

DUST TIGHT IP67 WATERTIGHT

UL LISTED CSA CERTIFIED

Poles	Number of Wires (N =Neutral / G = Ground)	Voltage AC (Except where noted)	Clock Position of Ground Contact	Straight  679318	Surface Mount  678421
3	2P + G	250 DC	03	679315	678315
	1P + N + G	125	04	679316	678316
	2P + G	250	06	679318	678318
	1P + N + G	277	05	679317	678317
	2P + G	480	07	679319	678319
4	2P + N + G	125/250	12	679424	678424
	3P + G	3Ø250	09	679421	678421
	3P + G	3Ø480	07	679419	678419
	3P + G	3Ø600	05	679417	678417
5	3P + N + G	3ØY120/208	09	679521	678521
	3P + N + G	3ØY277/480	07	679519	678519
	3P + N + G	3ØY347/600	05	679517	678517

NOTE: See pages 44 and 46 for surface mount receptacles and back boxes.
Part numbers with a light gray background have not been UL Listed or CSA Certified. Speak with a member of our sales team to learn more.

STOCK & CUSTOM
Power Distribution Units designed and manufactured to project specifications

custserv@waltherelectric.com

SURFACE MOUNT RECEPTACLES				DUST TIGHT IP67 WATERTIGHT				IP44 SPLASH PROOF		
UL LISTED		CSA CERTIFIED		20 AMPS	30 AMPS	60 AMPS	100 AMPS	20 AMPS	30 AMPS	60 AMPS
Poles	Number of Wires (N =Neutral / G = Ground)	Voltage AC	Clock Position of Ground Contact	 119306	 139306	 169409	 179318	 111306	 131306	 161409
3	2P + G	250 DC	03	119315	139315	–	179315	111315	131315	–
	1P + N + G	125	04	119316	139316	–	179316	111316	131316	–
	2P + G	250	06	119306	139306	–	179318	111306	131306	–
	1P + N + G	277	05	119317	139317	–	179317	111317	131317	–
	2P + G	480	07	119319	139319	–	179319	111319	131319	–
4	2P + N + G	125/250	12	119424	139424	169424	179424	111424	131424	161424
	3P + G	3ø250	09	119409	139409	169409	179421	111409	131409	161409
	3P + G	380/440	03	–	139403*	–	–	–	–	–
	3P + G	3ø480	07	119419	139419	169419	179419	111419	131419	161419
	3P + G	3ø600	05	119405	139405	169405	179417	111405	131405	161405
5	3P + N + G	Barge Overflow**	01	119501BL**	–	–	–	–	–	–
	3P + N + G		09	119509	139509	169509	179521	111509	131509	161509
	3P + N + G	3øY120/20	07	119519	139519	169519	179519	111519	131519	161519
	3P + N + G	3ø347/600	05	119505	139505	169505	179517	111505	131505	161505
7	6P + G	250	09	–	–	–	–	111709	131709	–
	6P + G	480	07	–	–	–	–	111719	131719	–

** Only for refridgerated containers*
*** BL devices are US Coast Guard required as per 46CFR Ch.1, 39.20-9*
NOTE: Part numbers with a light gray background have not been UL Listed or CSA Certified. Speak with a member of our sales team to learn more.

PHASE INVERTERS (CEEtyp)

Incorrectly installed rotating fields can easily be set right by quickly changing the polarity of the motor without having to rewire the phasing. Three steps, three minutes or less!

1 STEP 1 Turn the power OFF

2 STEP 2 Rotate the phase pins

3 STEP 3 Turn the power ON

PHASE INVERTERS (CEEtyp)				IP44 SPLASH PROOF
AMPS	Number of Wires (N =Neutral / G = Ground)	Voltage AC	Clock Position of Ground Contact	 210PH
16	3P + N + G	400	06	210 PH
32	3P + N + G	400	06	230 PH

PHASE SEQUENCE TEST PLUGS QUICKLY ALLOW FOR INSPECTION OF PHASE ROTATIONAL DIRECTION WITHIN SECONDS.

Verifies correct phase sequence to ensure clockwise motor rotation.
Confirms presence of all 3 phases to prevent 'lost phase' failures.

GREEN lamp lights: phase sequence is correct

RED lamp lights: phase sequence is wrong

GREEN & **RED** lamps light: one phase is missing

TEST PLUGS (CEEtyp)				IP44 SPLASH PROOF
AMPS	Number of Wires (N =Neutral / G = Ground)	Range of Voltage AC	Clock Position of Ground Contact	 210 DF
16	3P + G	110W - 690V	06	210 406 DF
16	3P + N + G	110W - 690V	06	210 DF
32	3P + G	110W - 690V	06	230 406 DF
32	3P + N + G	110W - 690V	06	230 DF
63	3P + G	110W - 690V	06	260 406 DF
63	3P + N + G	110W - 690V	06	260 DF

Cast Aluminum Junction Boxes for Straight Angle Watertight & Splashproof Female Receptacles (Panel Sockets)

Epoxy-coated junction boxes are corrosion resistant and designed to pass the 500-hour salt spray test, the UL hose down test and the UL external icing test.

- One-piece Construction
- Lightweight
- Rust-Resistant
- Non-Magnetic

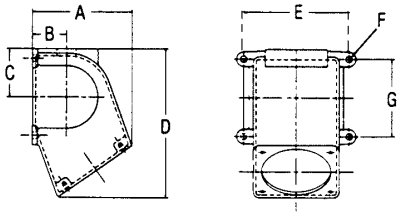

FEMALE RECEPTACLES (Panel Sockets) Back Boxes

MPN	Description	HUB Size	Dimensions							Cubic Inch Capacity
			A	B	C	D	E	F	G	
BE3-B75 BE3-B100	20° angle for 30A 4 and 5 wire receptacle	3/4” 1”	3.34	0.97	1.12	4.12	4	0.25	–	20.4
BE6-B125 BE6-B150	20° angle for all 60A receptacles	1 1/4” 1 1/2”	4.41	1.41	2.09	5.63	5	0.28	3	59.7
BE10-B150 BE10-B200	20° angle for all 100A receptacles	1 1/2” 2”	5.81	1.78	2.5	7.71	5.5	0.34	4	96.6

NOTE: Especially designed for straight angle watertight & splashproof receptacles.

BACK BOX ADAPTER PLATES

MPN	Walther Receptacle	Works with Hubbell Back Box
BB20-3W	20A, 3 Wire	BB201W, BB301W, FT202W or FT302W
BB20-345W	20A, 4 & 5 Wire 30A 3, 4 & 5 Wire	BB201W, BB301W, FT202W or FT302W
BB60-345W	60A, 3, 4 & 5 Wire	BB601W, BB602W or FW60/100
BB100-345W	100A, 3, 4 & 5 Wire	BB1001W, BB1002W or FW60/100

PG THREAD TO NPT THREAD ADAPTERS

MPN	DESCRIPTION	AMPERAGE RATING
PG135-50	PG13.5 to 1/2" NPT Adapter	20A
PG16-50	PG16 to 1/2" NPT Adapter	20A
PG21-75	PG21 to 3/4" Adapter	20A
PG29-100	PG29 to 1" NPT Adapter	30A
PG29-125	PG29 to 1 1/4" NPT Adapter	30A
PG36-125	PG36 to 1 1/4" NPT Adapter	60A
PG36-150	PG36 to 1 1/2" NPT Adapter	60A

NOTE: Additional Adapters are available. Speak with a member of our sales team to learn more.
PG Thread = Panzer-Gewinde
NPT Thread = National Pipe Thread

WATERTIGHT CLOSURE CAPS

MPN	POLES & WIRES	AMPERAGE RATING
613300	3 Wires	20A
633400	3 Wires	30A
663500	3 Wires	60A
673500	3 Wires	100A
613400	4 Wires	20A
633400	4 Wires	30A
663500	4 Wires	60A
673500	4 Wires	100A
613500	5 Wires	20A
633500	5 Wires	30A
663500	5 Wires	60A
673500	5 Wires	100A

NOTE: Especially designed for watertight male plugs and inlets

SPLASHPROOF CLOSURE CAPS

MPN	POLES & WIRES	AMPERAGE RATING
614300	3 Wires	20A
634400	3 Wires	30A
664500	3 Wires	60A
614400	4 Wires	20A
634400	4 Wires	30A
664500	4 Wires	60A
614500	5 Wires	20A
634500	5 Wires	30A
664500	5 Wires	60A

NOTE: Product line has been discontinued, call for stock.

PRE-INSTALLED CLOSURE CAPS

Closure caps provide watertight or splashproof protection to disconnected plugs and inlets. The splashproof chain or watertight nylon strap can be securely installed to avoid misplacing the cap when the plug or inlet is in use. Closure caps are available in packs of 2 or 5 or can be pre-installed by the factory prior to shipment. Consult a member of our customer care team for ordering information.

MALE PLUGS

				DUST TIGHT IP67 WATERTIGHT		IP44 SPLASH PROOF			
UL LISTED		CSA CERTIFIED		with Exterior Cable Gland	with Trumpet/ Bell Gland	with Exterior Cable Gland	with Trumpet/ Bell Gland	with Flexible Cable Entry	Angled 90°
Poles	Number of Wires (N =Neutral / G = Ground)	Voltage AC	Clock Position of Ground Contact	 219406	 219309	 210406	 211309	 210309	 216406
3	2P + G	110	04	–	219304	–	211304	210304	216304
			04	–	–	–	–	212304*	–
		230	06	–	219306	–	211306	210306	216606
			06	–	–	–	211306SW†	212306*	–
		400	09	–	219309	–	211309	210309	216309
			09	–	–	–	–	212309*	–
4	3P + G	110	04	219404	–	210404	211404	–	216404
		230	09	219409	–	210409	211409	–	216409
		400	06	219406	–	210406	211406	–	216406
			06		–	–	211406SW†	–	–
		500	07	219407	–	210407	211407	–	216407
		>50 (100-300Hz)	10	219410	–	210410	211410	–	216410
		>50 (300-500Hz)	02	219402	–	210402	211402	–	216402
5	3P + N + G	110	04	219504	–	210504	211504	–	216504
		230	09	219509	–	210509	211509	–	216509
		400	06	219	–	210	211	–	–
			06	–	–	210SW†	211SW†	–	216
7	6P + G	230	09	–		–	–	210709	–
		400	06	–	–	–	211706	210706	–
		500	07	–	–	–	–	210707	–

** Includes eye for padlock. Locks with panel socket 512306, 512304, and 512309. † SW=Black backshell especially designed for stage lighting.*
NOTE: Part numbers with a light gray background have not been UL Listed or CSA Certified. Speak with a member of our sales team to learn more.

FEMALE COUPLERS (Connectors)

				DUST TIGHT IP67 WATERTIGHT		IP44 SPLASH PROOF			
UL LISTED		CSA CERTIFIED		with Exterior Cable Gland	with Trumpet/ Bell Gland	with Exterior Cable Gland	with Trumpet/ Bell Gland	with Flexible Cable Entry	Angled 90°
Poles	Number of Wires (N =Neutral / G = Ground)	Voltage AC	Clock Position of Ground Contact	 319406	 319309	 310406	 311406	 310309	 316309
3	2P + G	110	04	–	319304	–	311304	310304	–
		230	06	–	319306	–	311306	310306	–
			06	–	–	–	311306SW†	–	–
		400	09	–	319309	–	311309	310309	–
4	3P + G	110	04	319404	–	310404	311404	–	316304
		230	09	319409	–	310409	311409	–	316306
		400	06	319406	–	310406	311406	–	316309
			06	–	–	–	311406SW†	–	–
		500	07	319407	–	310407	311407	–	–
		>50 (100-300Hz)	10	319410	–	310410	311410	–	–
		>50 (300-500Hz)	02	319402	–	310402	311402	–	–
5	3P + N + G	110	04	319504	–	310504	311504	–	–
		230	09	319509	–	310509	311509	–	–
		400	06	319	–	310	311	–	–
			06	–	–	310SW†	311SW†	–	–
7	6P + G	230	09	–	–	–	–	310709	–
		400	06	–	–	–	311706	310706	–
		500	07	–	–	–	–	310707	–

† SW=Black backshell especially designed for stage lighting.
NOTE: Part numbers with a light gray background have not been UL Listed or CSA Certified. Speak with a member of our sales team to learn more.

FEMALE PANEL SOCKETS (Receptacles)

				DUST TIGHT IP67 WATERTIGHT			IP44 SPLASH PROOF		
				Straight	Angled 15°	Angled 80°	Straight	Angled 15°	Angled 80°
Poles	Number of Wires (N =Neutral / G = Ground)	Voltage AC	Clock Position of Ground Contact	 419309	 519309	 518309	 410309	 510309	 514309
3	2P + G	110	04	419304	519304	518304	410304	510304	514304
			04	–	–	–	410304SW†	–	–
		230	06	419306	519306	518306	410306	510306	514306
			06	–	–	–	410306SW†	–	–
		400	09	419309	519309	518309	410309	510309	514309
4	3P + G	110	04	419404	519404	518404	410404	510404	514404
		230	09	419409	519409	518409	410409	510409	514409
		400	06	419406	519406	518406	410406	510406	514406
			06	–	–	–	410406SW†	–	–
		500	07	419407	519407	518407	410407	510407	514407
		>50 (100-300Hz)	10	419410	519410	518410	410410	510410	514410
		>50 (300-500Hz)	02	419402	519402	518402	410402	510402	514402
5	3P + N + G	110	04	419504	519504	518504	410504	510504	514504
		230	09	419509	519509	518509	410509	510509	514509
		400	06	419	519	518	410	510	514
			06	–	–	–	410SW†	–	–
7	6P + G	230	09	–	–	–	411709	–	514709
		400	06	–	–	–	411706	–	514706
		500	07	–	–	–	411707	–	514707

† SW=Black backshell especially designed for stage lighting.
NOTE: Part numbers with a light gray background have not been UL Listed or CSA Certified. Speak with a member of our sales team to learn more.

MALE APPLIANCE PLUGS (Inlets)

				DUST TIGHT IP67 WATERTIGHT		IP44 SPLASH PROOF			
				Angled 80°	Surface Mount	Straight	Angled 80°	External Surface Mount	Internal Surface Mount
Poles	Number of Wires (N =Neutral / G = Ground)	Voltage AC	Clock Position of Ground Contact	 619309	 618309	 615309	 611309	 610309	 616406
3	2P + G	110	04	619304	618304	615304	611304	610304	–
		230	06	619306	618306	615306	611306	610306	–
		400	09	619309	618309	615309	611309	610309	–
4	3P + G	110	04	619404	618404	615404	611404	610404	616404
		230	09	619409	618409	615409	611409	610409	616409
		400	06	619406	618406	615406	611406	610406	616406
		500	07	619407	618407	615407	611407	610407	616407
		>50 (100-300Hz)	10	619410	618410	615410	611410	610410	616410
		>50 (300-500Hz)	02	619402	618402	615402	611402	610402	616402
5	3P + N + G	110	04	619504	618504	615504	611504	610504	616504
		230	09	619509	618509	615509	611509	610509	616509
		400	06	619	618	615	611	610	616
7	6P + G	230	09	–	–	–	611709	610709	616709
		400	06	–	–	–	611706	610706	616706
		500	07	–	–	–	611707	610707	616707

NOTE: Part numbers with a light gray background have not been UL Listed or CSA Certified. Speak with a member of our sales team to learn more.

MALE PLUGS

				DUST TIGHT IP67 WATERTIGHT		IP44 SPLASH PROOF		
UL LISTED		CSA CERTIFIED		with Exterior Cable Gland	with Trumpet/ Bell Gland	with Exterior Cable Gland	with Trumpet/ Bell Gland	Angled 90°
Poles	Number of Wires (N =Neutral / G = Ground)	Voltage AC	Clock Position of Ground Contact	 239309	 238	 230309	 231309	 236309
3	2P + G	110	04	239304	–	230304	231304	236304
		230	06	239306	–	230306	231306	236306
			06	–	–	–	231306SW†	–
		400	09	239309	–	230309	231309	236309
4	3P + G	110	04	239404	–	230404	231404	236404
		230	09	239409	238409	230409	231409	236409
		400	06	239406	–	230406	231406	236406
		380/440*	03	239403*	238403	–	231406SW†	–
		500	07	239407	–	230407	231407	236407
		>50 (100-300Hz)	10	239410	–	230410	231410	236410
		>50 (300-500Hz)	02	239402	–	230402	231402	236402
5	3P + N + G	110	04	239504	–	230504	231504	236504
		230	09	239509	–	230509	231509	236509
		400	06	239	238	230	231	236
			06	–	–	230SW†	231SW†	–
7	6P + G	230	09	–	–	–	–	–
		400	06	–	–	230706	231706	–
		500	07	–	–	–	–	–

** For Refridgerated Containers ONLY. † SW=Black backshell especially designed for stage lighting.*
NOTE: Part numbers with a light gray background have not been UL Listed or CSA Certified. Speak with a member of our sales team to learn more.

FEMALE COUPLERS (Connectors)

				DUST TIGHT IP67 WATERTIGHT		IP44 SPLASH PROOF	
UL LISTED		CSA CERTIFIED		with Exterior Cable Gland	with Exterior Cable Gland	with Exterior Cable Gland	with Trumpet/ Bell Gland
Poles	Number of Wires (N =Neutral / G = Ground)	Voltage AC	Clock Position of Ground Contact	 339309	 338	 330309	 331309
3	2P + G	110	04	339304	–	330304	331304
		230	06	339306	–	330306	331306
			06	–	–	–	331306SW†
		400	09	339309	–	330309	331309
4	3P + G	110	04	339404	–	330404	331404
		230	09	339409	338409	330409	331409
		400	06	339406	–	330406	331406
		380/440*	06	–	–	–	331406SW†
			03	339403*	338403	–	–
		500	07	339407	–	330407	331407
		>50 (100-300Hz)	10	339410	–	330410	331410
		>50 (300-500Hz)	02	339402	–	330402	331402
5	3P + N + G	110	04	339504	–	330504	331504
		230	09	339509	–	330509	331509
		400	06	339	338	330	331
			06	–	–	330SW†	331SW†
7	6P + G	230	09	–	–	–	–
		400	06	–	–	330706	331706
		500	07	–	–	–	–

** For Refridgerated Containers ONLY. † SW=Black backshell especially designed for stage lighting.*
NOTE: Part numbers with a light gray background have not been UL Listed or CSA Certified. Speak with a member of our sales team to learn more.

FEMALE PANEL SOCKETS (Receptacles)

				DUST TIGHT IP67 WATERTIGHT			IP44 SPLASH PROOF		
				Straight	Angled 15°	Angled 80°	Straight	Angled 15°	Angled 80°
Poles	Number of Wires (N =Neutral / G = Ground)	Voltage AC	Clock Position of Ground Contact	 439406	 539309	 538	 430309	 530406	 534
3	2P + G	110	04	439304	539304	538304	430304	530304	534304
		230	06	439306	539306	538306	430306	530306	534306
			06	–	539309	–	430306SW†	–	–
		400	09	439309	539404	538309	430309	530309	534309
4	3P + G	110	04	439404	539409	538404	430404	530404	534404
		230	09	439409	539406	538409	430409	530409	534409
		400	06	439406	–	538406	430406	530406	534406
		380/440*	06	–	–	–	430406SW†	–	–
		500	03	439403*	539407	538407	430407	530407	534407
		>50 (100-300Hz)	07	439407	539410	538410	430410	530410	534410
		>50 (300-500Hz)	10	439410	539402	538402	430402	530402	534402
5	3P + N + G	110	02	439402	539504	538504	430504	530504	534504
		230	04	439504	539509	538509	430509	530509	534509
		400	09	439509	539	538	430	530	534
			06	439	–	–	430SW†	–	–
7	6P + G	230	09	–	–	–	–	–	
		400	06	–	–	–	431706	–	534706
		500	07	–	–	–	–	–	–

UL LISTED CSA CERTIFIED

** For Refridgerated Containers ONLY.*
NOTE: Part numbers with a light gray background have not been UL Listed or CSA Certified. Speak with a member of our sales team to learn more.

MALE APPLIANCE PLUGS (Inlets)

				DUST TIGHT IP67 WATERTIGHT		IP44 SPLASH PROOF			
				with Exterior Cable Gland	with Trumpet/ Bell Gland	with Exterior Cable Gland	with Trumpet/ Bell Gland	with Flexible Cable Entry	Angled 90°
Poles	Number of Wires (N =Neutral / G = Ground)	Voltage AC	Clock Position of Ground Contact	 639309	 638309	 635	 631	 630309	 636
3	2P + G	110	04	639304	638304	635304	631304	630304	636304
		230	06	639306	638306	635306	631306	630306	636306
		400	09	639309	638309	635309	631309	630309	636309
4	3P + G	110	04	639404	638404	635404	631404	630404	636404
		230	09	639409	638409	635409	631409	630409	636409
		400	06	639406	638406	635406	631406	630406	636406
		380/440*	03	639403*	638403*	–	–	–	–
		500	07	639407	638407	635407	631407	630407	636407
		>50 (100-300Hz)	10	639410	638410	635410	631410	630410	636410
		>50 (300-500Hz)	02	639402	638402	635402	631402	630410	636410
5	3P + N + G	110	04	639504	638504	635504	631504	630504	636504
		230	09	639509	638509	635509	631509	630509	636509
		400	06	639	638	635	631	630	636
7	6P + G	230	09	–	–	–	–	–	–
		400	06	–	–	635706	631706	630706	636706
		500	07	–	–	–	–	–	–

UL LISTED CSA CERTIFIED

** For Refridgerated Containers ONLY.*
NOTE: Part numbers with a light gray background have not been UL Listed or CSA Certified. Speak with a member of our sales team to learn more.

MALE PLUGS

				DUST TIGHT IP67 WATERTIGHT	IP44 SPLASH PROOF	
UL LISTED		CSA CERTIFIED		with Trumpet/ Bell Gland	with Trumpet/ Bell Gland	with Flexible Cable Sleeve
Poles	Number of Wires (N =Neutral / G = Ground)	Voltage AC	Clock Position of Ground Contact	 269406	 261406	 260406
3	2P + G	110	04	269304	261304	260304
		230	06	269306	261306	260306
			06	–	261306SW†	–
		400	09	269309	261309	260309
4	3P + G	110	04	269404	261404	260404
		230	09	269409	261409	269409
		400	06	269406	261406	260406
			06	–	261406SW†	–
		500	07	269407	261407	260407
5	3P + N+G	110	04	269504	261504	260504
		230	09	269509	261509	260509
		400	06	269	261	260
			06	–	261SW†	–

NOTE: Part numbers with a light gray background have not been UL Listed or CSA Certified. Speak with a member of our sales team to learn more.
† SW=Black backshell especially designed for stage lighting.

FEMALE COUPLERS (Connectors)

				DUST TIGHT IP67 WATERTIGHT	IP44 SPLASH PROOF	
UL LISTED		CSA CERTIFIED		with Trumpet/ Bell Gland	with Trumpet/ Bell Gland	with Flexible Cable Sleeve
Poles	Number of Wires (N =Neutral / G = Ground)	Voltage AC	Clock Position of Ground Contact	 369406	 361406	 360406
3	2P + G	110	04	369304	361304	360304
		230	06	369306	361306	360306
			06	–	361306SW†	–
		400	09	369309	361309	360309
4	3P + G	110	04	369404	361404	360404
		230	09	369409	361409	360409
		400	06	369406	361406	360406
			06	–	361406SW†	–
		500	07	369407	361407	360407
5	3P + N+G	110	04	369504	361504	360504
		230	09	369509	361509	360509
			06	369	361	360
		400	06	–	361SW†	–

† SW=Black backshell especially designed for stage lighting.

FEMALE PANEL SOCKETS (Receptacles)

UL LISTED CSA CERTIFIED

Poles	Number of Wires (N =Neutral / G = Ground)	Voltage AC	Clock Position of Ground Contact	DUST TIGHT IP67 WATERTIGHT Straight	Angled 15°	Angled 80°	IP44 SPLASH PROOF Straight	Angled 15°	Angled 80°
				 469406	 569406	 568	 460309	 560309	 564
3	2P + G	110	04	469304	569304	568304	460304	560304	564304
		230	06	469306	569306	568306	460306	560306	564306
			06	–	–	–	460306SW†	–	–
		400	09	469309	569309	568309	460309	560309	564309
4	3P + G	110	04	469404	569404	568404	460404	560404	564404
		230	09	469409	569409	568409	460409	560409	564409
		400	06	469406	569406	568406	460406	560406	564406
			06	–	–	–	460406SW†	–	–
		500	07	469407	569407	568407	460407	560407	564407
5	3P + N + G	110	04	469504	569504	568504	460504	560504	564504
		230	09	469509	569509	568509	460509	560509	564509
		400	06	469	569	568	460	560	564
			06	–	–	–	460SW†	–	–

NOTE: See pages 44 and 46 for surface mount receptacles and back boxes.
† SW=Black backshell especially designed for stage lighting.

MALE APPLIANCE PLUG (Inlet)

UL LISTED CSA CERTIFIED

Poles	Number of Wires (N =Neutral / G = Ground)	Voltage AC	Clock Position of Ground Contact	DUST TIGHT IP67 WATERTIGHT Angled 80°	Surface Mount	IP44 SPLASH PROOF Straight	Angled 80°
				 669309	 668309	 665	 661
3	2P + G	110	04	669304	668304	–	661304
		230	06	669306	668306	–	661306
		400	09	669309	668309	–	661309
4	3P + G	110	04	669404	668404	–	661404
		230	09	669409	668409	–	661409
		400	06	669406	668406	–	661406
		500	07	669407	668407	–	661407
5	3P + N + G	110	04	669504	668504	665504	661504
		230	09	669509	668509	665509	661509
		400	06	669	668	665	661

NOTE: Part numbers with a light gray background have not been UL Listed or CSA Certified. Speak with a member of our sales team to learn more.

MALE PLUGS

DUST TIGHT IP67 WATERTIGHT

UL LISTED CSA CERTIFIED

with Trumpet Bell Gland

279309

Poles	Number of Wires (N =Neutral / G = Ground)	Voltage AC	Clock Position of Ground Contact	
3	2P + G	110	04	279304
		230	06	279306
			06	279306SW†
		400	09	279309
4	3P + G	110	04	279404
		230	09	279409
		400	06	279406
			06	279406SW†
		500	07	279407
5	3P + N + G	110	04	279504
		230	09	279509
		400	06	279
			06	279SW†

NOTE: 100 Amp devices are only available in IP67 Watertight configurations.
† SW=Black backshell especially designed for stage lighting.

FEMALE COUPLERS (Connectors)

DUST TIGHT IP67 WATERTIGHT

UL LISTED CSA CERTIFIED

with Trumpet Bell Gland

379309

Poles	Number of Wires (N =Neutral / G = Ground)	Voltage AC	Clock Position of Ground Contact	
3	2P + G	110	04	379304
		230	06	379306
			06	379306SW†
		400	09	379309
		110	04	379404
4	3P + G	230	09	379409
		400	06	379406
			06	379406SW†
		500	07	379407
5	3P + N + G	110	04	379504
		230	09	379509
		400	06	379
			06	379SW†

NOTE: 100 Amp devices are only available in IP67 Watertight configurations.
† SW=Black backshell especially designed for stage lighting.

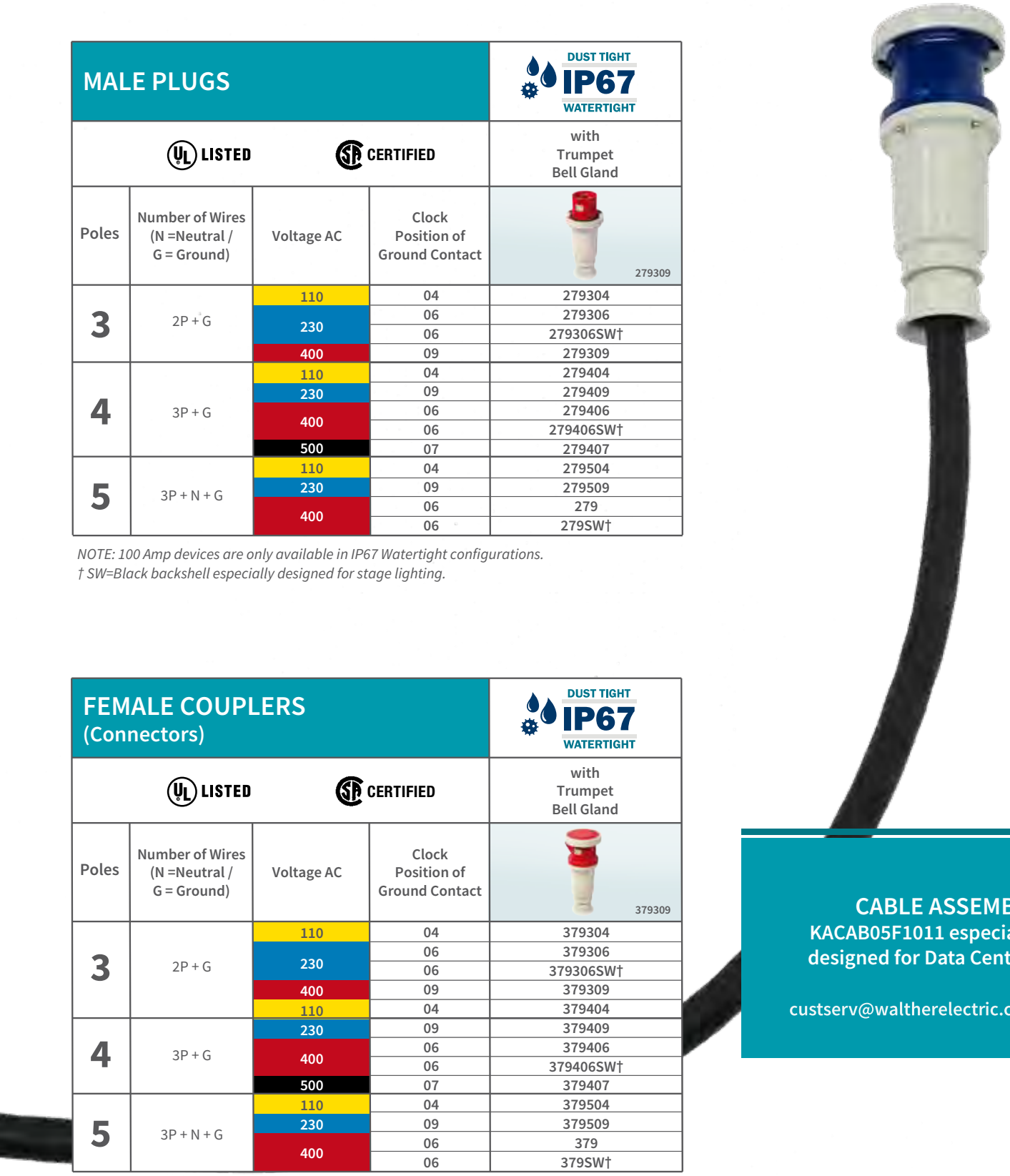

CABLE ASSEMBLY
KACAB05F1011 especially designed for Data Centers

custserv@waltherelectric.com

FEMALE PANEL SOCKETS
(Receptacles)

DUST TIGHT IP67 WATERTIGHT

UL LISTED CSA CERTIFIED

Poles	Number of Wires (N =Neutral / G = Ground)	Voltage AC	Clock Position of Ground Contact	Straight  479309	Angled 15°  579309
3	2P + G	110	04	479304	579304
		230	06	479306	579306
			06	479306SW†	–
		400	09	479309	579309
4	3P + G	110	04	479404	579404
		230	09	479409	579409
		400	06	479406	579406
			06	479406SW†	–
		500	07	479407	579407
5	3P + N+ G	110	04	479504	579504
		230	09	479509	579509
		400	06	479	579
			06	479SW†	–

NOTE: See pages 44 and 46 for surface mount receptacles and back boxes.
† SW=Black backshell especially designed for stage lighting.

MALE APPLIANCE PLUGS
(Inlets)

DUST TIGHT IP67 WATERTIGHT

UL LISTED CSA CERTIFIED

Poles	Number of Wires (N =Neutral / G = Ground)	Voltage AC	Clock Position of Ground Contact	Angled 80°  679309	Surface Mount  678406
3	2P + G	110	04	679304	678304
		230	06	679306	678306
		400	09	679309	678309
4	3P + G	110	04	679404	678404
		230	09	679409	678409
		400	06	679406	678406
		500	07	679407	678407
5	3P + N + G	110	04	679504	678504
		230	09	679509	678509
		400	06	679	678

NOTE: Part numbers with a light gray background have not been UL Listed or CSA Certified.
Speak with a member of our sales team to learn more.

Designed for the entertainment industry, our Stage Lighting IEC connectors, Power Distribution Units & Cable Assemblies are used to provide temporary power for movie and TV sets, theaters, concerts, and other special events.

Our Stage Lighting IEC connector black backshell reduces light reflections making them virtually hidden from view by the audience.

We manufacture rugged cable assemblies with heavy duty rectangular connectors, IEC, NEMA, CS, CAMLOK, or connector of your choice for industrial power solutions.

Our power cable assemblies are 100% pretested and labeled for easy installation & accurate tracking. Manufactured in a controlled environment, with industrial grade components, and engineered to the highest level of quality for reliability and safety.

1
2
3
4
5
6
7
8
9
10
11

Our products are "dual rated" for different product safety standards around the world. The electrical connector will always be rated for what each country allows based on how the different agencies test and rate these industrial electrical components.

MALE PLUGS – 16A/20A				DUST TIGHT IP67 WATERTIGHT	IP44 SPLASH PROOF	
UL LISTED		CSA CERTIFIED		with Exterior Cable Gland	with Exterior Cable Gland	with Trumpet/ Bell Gland
Poles	Number of Wires (N =Neutral / G = Ground)	Voltage AC	Clock Position of Ground Contact		 210SW	 211SW
3	2P + G	230	06	–	–	211306SW
4	3P + G	400	07	–	–	211406SW
5	3P + N + G	400	07	–	210SW	211SW

MALE PLUGS – 32A/30A				DUST TIGHT IP67 WATERTIGHT	IP44 SPLASH PROOF	
UL LISTED		CSA CERTIFIED		with Exterior Cable Gland	with Exterior Cable Gland	with Trumpet/ Bell Gland
Poles	Number of Wires (N =Neutral / G = Ground)	Voltage AC	Clock Position of Ground Contact		 230SW	231SW
3	2P + G	230	06	–	–	231306SW
4	3P + G	400	07	–	–	231406SW
5	3P + N + G	400	07	–	230SW	231SW

MALE PLUGS – 63A/60A				DUST TIGHT IP67 WATERTIGHT	IP44 SPLASH PROOF	
UL LISTED		CSA CERTIFIED		with Exterior Cable Gland	with Exterior Cable Gland	with Trumpet/ Bell Gland
Poles	Number of Wires (N =Neutral / G = Ground)	Voltage AC	Clock Position of Ground Contact			 261SW
3	2P + G	230	06	–	–	261306SW
4	3P + G	400	07	–	–	261406SW
5	3P + N + G	400	07	–	–	261SW

MALE PLUGS – 125A/100A				DUST TIGHT IP67 WATERTIGHT	IP44 SPLASH PROOF	
UL LISTED		CSA CERTIFIED		with Exterior Cable Gland	with Exterior Cable Gland	with Trumpet/ Bell Gland
Poles	Number of Wires (N =Neutral / G = Ground)	Voltage AC	Clock Position of Ground Contact	 279SW		
3	2P + G	230	06	279306SW	–	–
4	3P + G	400	07	279406SW	–	–
5	3P + N + G	400	07	279SW	–	–

FEMALE COUPLERS (Connectors) – 16A/20A				DUST TIGHT IP67 WATERTIGHT	IP44 SPLASH PROOF	
UL LISTED		CSA CERTIFIED		with Exterior Cable Gland	with Exterior Cable Gland	with Trumpet/ Bell Gland
Poles	Number of Wires (N =Neutral / G = Ground)	Voltage AC	Clock Position of Ground Contact		 310SW	 311SW
3	2P + G	230	06	–	–	311306SW
4	3P + G	400	07	–	–	311406SW
5	3P + N + G	400	07	–	310SW	311SW

FEMALE COUPLERS (Connectors) – 32A/30A				DUST TIGHT IP67 WATERTIGHT	IP44 SPLASH PROOF	
UL LISTED		CSA CERTIFIED		with Exterior Cable Gland	with Exterior Cable Gland	with Trumpet/ Bell Gland
Poles	Number of Wires (N =Neutral / G = Ground)	Voltage AC	Clock Position of Ground Contact		 330SW	 331SW
3	2P + G	230	06	–	–	331306SW
4	3P + G	400	07	–	–	331406SW
5	3P + N + G	400	07	–	330SW	331SW

FEMALE COUPLERS (Connectors) – 63A/60A				DUST TIGHT IP67 WATERTIGHT	IP44 SPLASH PROOF	
LISTED		CERTIFIED		with Exterior Cable Gland	with Exterior Cable Gland	with Trumpet/ Bell Gland
Poles	Number of Wires (N =Neutral / G = Ground)	Voltage AC	Clock Position of Ground Contact			 361SW
3	2P + G	230	06	–	–	361306SW
4	3P + G	400	07	–	–	361406SW
5	3P + N + G	400	07	–	–	361SW

FEMALE COUPLERS (Connectors) – 125A/100A				DUST TIGHT IP67 WATERTIGHT	IP44 SPLASH PROOF	
LISTED		CERTIFIED		with Exterior Cable Gland	with Exterior Cable Gland	with Trumpet/ Bell Gland
Poles	Number of Wires (N =Neutral / G = Ground)	Voltage AC	Clock Position of Ground Contact	 379SW		
3	2P + G	230	06	379306SW	–	–
4	3P + G	400	07	379406SW	–	–
5	3P + N + G	400	07	379SW	–	–

FEMALE PANEL SOCKETS (Receptacles) – 16A/20A				DUST TIGHT IP67 WATERTIGHT	IP44 SPLASH PROOF
UL LISTED		CSA CERTIFIED		Straight	Straight
Poles	Number of Wires (N =Neutral / G = Ground)	Voltage AC	Clock Position of Ground Contact		 410SW
3	2P + G	230	06	–	410306SW
4	3P + G	400	07	–	410406SW
5	3P + N + G	400	07	–	410SW

FEMALE PANEL SOCKETS (Receptacles) – 32A/30A				DUST TIGHT IP67 WATERTIGHT	IP44 SPLASH PROOF
UL LISTED		CSA CERTIFIED		Straight	Straight
Poles	Number of Wires (N =Neutral / G = Ground)	Voltage AC	Clock Position of Ground Contact		 430SW
3	2P + G	230	06	–	430306SW
4	3P + G	400	07	–	430406SW
5	3P + N + G	400	07	–	430SW

Stock and Custom Power Distribution Units are available. Easily distribute power to multiple units for added flexibility.

FEMALE PANEL SOCKETS (Receptacles) – 63A/60A				DUST TIGHT IP67 WATERTIGHT	IP44 SPLASH PROOF
UL LISTED		CSA CERTIFIED		Straight	Straight
Poles	Number of Wires (N =Neutral / G = Ground)	Voltage AC	Clock Position of Ground Contact		 460SW
3	2P + G	230	06	–	460306SW
4	3P + G	400	07	–	460406SW
5	3P + N + G	400	07	–	460SW

FEMALE PANEL SOCKETS (Receptacles) – 125A/100A				DUST TIGHT IP67 WATERTIGHT	IP44 SPLASH PROOF
UL LISTED		CSA CERTIFIED		Straight	Straight
Poles	Number of Wires (N =Neutral / G = Ground)	Voltage AC	Clock Position of Ground Contact	 479SW	
3	2P + G	230	06	479306SW	–
4	3P + G	400	07	479406SW	–
5	3P + N + G	400	07	479SW	–


WALTHER-WERKE

CABLE PROTECTORS
CHOOSING THE RIGHT MODEL

WHY USE CABLE PROTECTORS

- Protect your cables, cords, and hose lines from pedestrian traffic, vehicle traffic and heavy-duty equipment movement
- Ideal for local events, festivals, sporting events, construction sites, conventions centers, manufacturing floor, or warehouse
- Cost-effective solution helps prevent damage caused by wire vibration, contact with other heat producing equipment or from tripping/cable pull
- Improve accessibility

Cable protection systems are offered in a variety of sizes to suit all types of INDOOR/OUTDOOR applications.

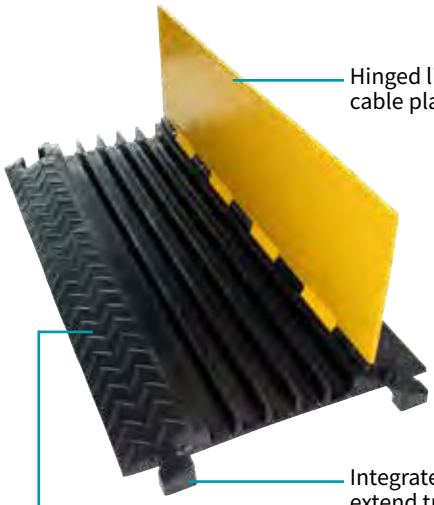

WHAT TO CONSIDER

Size - How many cables do you want to protect? Protect 1, 2, 4, or 5 cables within the same cable protection system.

Cable Diameter - Make sure that your cables will fit into the cable protector by choosing the proper channel width and height.

Load Capacity - What will be crossing the path of the cables? With capacities up to 800,000 lbs. per axle (load that a vehicle will put on a cable protectors as they drive over them), cable protectors can withstand thousands of pounds and endure constant impact.

Our **Heavy-Duty** cable protectors are ideal for vehicles, hauling trucks, or forklifts and have a maximum axle load of 9 tons.

Our **Light-Duty** cable protectors are best for light to heavy pedestrian walking, light commercial and utility applications.

	PRODUCT PHOTO	PART #	COLOR	MATERIAL	OVERALL SIZE	AXLE LOAD MAX	INTEGRATED CONNECTOR	# of CHANNELS	CHANNEL SIZE	Net Weight
CABLE PROTECTION SYSTEM		39870020	Black/Yellow	SBR/NBR Solid Rubber	39.37" x 9.84" x 1.89" or 1000 x 250 x 48mm (LxWxH)	9t	YES	2	(2x) 1.10" x 1.18" or 28 x 30mm (WxH)	7.5 kg or 165.35 lbs
		39870021	Black/Yellow	SBR/NBR Solid Rubber	30° Curve x 9.84" x 1.89" or 250 x 48 mm (WxH)	9t	NO	2	(2x) 1.10" x 1.18" or 28 x 30mm (WxH)	1.9 kg or 4.19 lbs
		39870022	Black	SBR/NBR Solid Rubber	5.91" x 9.84" x 1.89" or 150 x 250 x 48mm (LxWxH)	9t	NO	2	(2x) 1.10" x 1.18" or 28 x 30mm (WxH)	2 kg or 4.41 lbs
		39870023	Black	SBR/NBR Solid Rubber	1.77" x 1.18" x 1.50" or 45 x 30 x 38mm (LxWxH)	9t				0.1 kg or 0.22 lbs
CABLE PROTECTION SYSTEM		39870040	Black/Yellow	SBR/NBR Solid Rubber	31.49" x 23.22" x 3.07" or 800 x 590 x 78mm (LxWxH)	9t	NO	4	(2x) 2.04" x 2.04" or 52 x 52mm (WxH) // (2x) 1.18" x 2.04" or 46 x 52mm (WxH)	23 kg or 50.71 lbs
		39870041	Black/Yellow	SBR/NBR Solid Rubber	30° Curve x 23.23" x 3.07" or 590 x 78 mm (WxH)	9t	NO	4	(2x) 2.04" x 2.04" or 52 x 52mm (WxH) // (2x) 1.18" x 2.04" or 46 x 52mm (WxH)	8.9 kg or 19.62 lbs
		39870042	Black	SBR/NBR Solid Rubber	11.81" x 2.28" x 3.07" or 300 x 58 x 78mm (LxWxH)	9t	NO	4	(2x) 2.04" x 2.04" or 52 x 52mm (WxH) // (2x) 1.18" x 2.04" or 46 x 52mm (WxH)	6.6 kg or 14.55 lbs
		39870043	Black	SBR/NBR Solid Rubber	4.13" x 1.85" x 1.97" or 105 x 47 x 50mm (LxWxH)	9t				0.2 kg or 0.44 lbs
CABLE PROTECTION SYSTEM		39870050	Black/Yellow	SBR/NBR Solid Rubber	31.50" x 17.72" x 1.97" or 800 x 450 x 50mm (LxWxH)	9t	YES	5	(5x) 1.38" x 1.38" or 35 x 35mm (WxH)	15 kg or 33.07 lbs
		39870051	Black/Yellow	SBR/NBR Solid Rubber	30° Curve x 17.72" x 1.97" or 450 x 50mm (WxH)	9t	YES	5	(5x) 1.38" x 1.38" or 35 x 35mm (WxH)	4.8 kg or 10.58 lbs
		39870052	Black	SBR/NBR Solid Rubber	7.87" x 17.72" x 1.97" or 200 x 450 x 50mm (LxWxH)	9t	NO	5	(5x) 1.38" x 1.38" or 35 x 35mm (WxH)	4.4 kg or 9.70 lbs
		39870053	Black	SBR/NBR Solid Rubber	3.94" x 1.97" x 1.57" or 100 x 50 x 40mm (LxWxH)	9t				0.15 kg or 0.33 lbs
SINGLE		39870080	Black/Yellow	SBR/NBR Solid Rubber	31.49" x 23.22" x 4.13" or 800 x 590 x 105mm (LxWxH)	9t	YES	2	(2x) 3.14" x 3.14" or 80 x 80mm (WxH)	27 kg or 59.52 lbs
SINGLE		39870090	Black	SBR/NBR Solid Rubber	39.40" x 5.12" x 0.79" or 1000 x 130 x 20mm (LxWxH)	200 kg or 440 lbs	YES	1	(1x) 0.40" x 1.57" or 10 x 40mm (WxH)	2 kg or 4.41 lbs

Mechanical interlock devices are electrical receptacles that allow compatible plugs to be attached only when the power is turned off. They also prevent the plug from being removed from the receptacle while the power is on.

COMPLIANCE WITH OSHA LOCKOUT REQUIREMENTS

Walther's Mechanical Interlock's bright red handle can be locked in the "OFF" position as a method of compliance with OSHA lockout requirements. The handle can accept up to a 5/16" padlock shaft.

WATERTIGHT NEMA 4X, REQUIREMENTS

Walther's Mechanical Interlocks are gasketed and rated as a Watertight NEMA 4X, 12K enclosure. The nonmetallic enclosure, while abuse and corrosion resistant, is also non-conductive which enhances the safety of the product.

GROUNDING PLATE

Walther's Mechanical Interlocks are supplied with a free floating grounding plate. Because of this unique method of grounding, conduit entry may be made from the top, bottom or side. No other brand offers this type of installation versatility.

COMPACT SIZE

All versions and sizes are designed to fit within the web of an 8" column. This compact size allows the use of columns as a mounting location.

EASY IDENTIFICATION

Catalog number, rating and certifications are indicated on the label for easy identification of mating devices.

COLOR CODED RECEPTACLE COVERS

Receptacle covers are color-coded by voltage in accordance with IEC60309 standard.

A PRE-MOLDED OFFSET DIMPLE

Walther does not install a hub at the top of our mechanical interlocks, rather a pre-molded offset dimple (drill point) is provided instead of a conduit entry hole. This allows the installer to choose the size of the conduit to be used, and the location where the conduit will be attached to the enclosure (top, bottom or side entry) without the use of knockout plugs and reducers. Arranging the conduit entry hole at the dimple location will prevent condensation from falling directly on the interior electrical components, such as the switch. It will also allow for more room to pull conductors when wiring. Approximately 40% of all entry is from the bottom.

COMPLETELY COMPATIBLE

Completely compatible with not only Walther IEC60309-1 and 309-2 pl ugs, but with any manufacturer's plugs that conform to the IEC60309 stan - dards and color coding system ... anywhere in the world. When Walther IP67 plugs are used in-conjunction with NEMA 4X rated Walther mechanical interlocks, both devices are NEMA 4X rated.

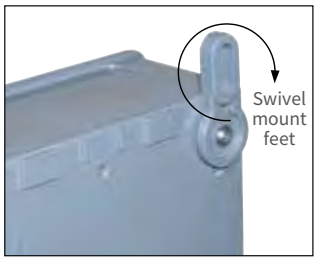

SWIVEL MOUNT FEET (135°)

Swivel mount feet can be used for installations where irregular or tight fit applications exist.

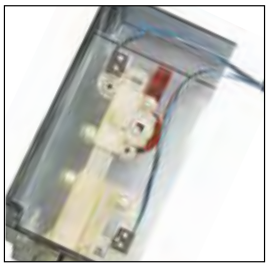

MICRO SWITCH

Available upon request. May be used to transmit signal when plug is inserted or when switch is turned to the "ON" position. May also be used for indicator light to display and confirm when switch is turned "ON" or "OFF". Consult technical service for price and delivery.

MECHANICAL INTERLOCKS STANDARD SWITCH VERSION

AMPS	Poles & Wires	Voltage AC	Clock Position of Ground Contact	Horsepower Ratings	DUST TIGHT IP67 WATERTIGHT	IP44 SPLASH PROOF
20	2P3W	125	04	0.75	AE119316	AE110316
		250	06	2	AE119318	AE110318
		480	07	4	AE119319	AE110319
	3P4W	125/240	12	.75 @ 120V 2 @ 240V	AE119424	AE110424
		3Ø250	09	5	AE119421	AE110421
		3Ø480	07	10	AE119419	AE110419
		3Ø600	05	14	AE119417	AE110417
	4P5W	3ØY120/208	09	5	AE119521	AE110521
		3ØY277/480	07	10	AE119519	AE110519
		3ØY347/600	05	14	AE119517	AE110517

AE119419

30	2P3W	125	04	1.5	AE139316	AE130421
		250	06	3.5	AE139318	AE130419
		480	07	6	AE139319	AE130417
	3P4W	125/240	12	1.5 @120V 3.5 @ 240V	AE139424	AE130424
		3Ø250	09	7.5	AE139421	AE130421
		3Ø480	07	15	AE139419	AE130419
		3Ø600	05	20	AE139417	AE130417
	4P5W	3ØY120/208	09	7.5	AE139521	AE130521
		3ØY277/480	07	15	AE139519	AE130519
		3ØY347/600	05	20	AE139517	AE130517

AE130419

32	3P4W	380 50Hz 440 60Hz	03	12	AE139415*	–

60	2P3W	125	04	3.5	AE169316	AE160316
		250	06	7.5	AE169318	AE160318
		480	07	13.5	AE169319	AE160319
	3P4W	125/240	12	3.5 @ 120V 7.5 @240V	AE169424	AE160424
		3Ø250	09	15	AE169421	AE160421
		3Ø480	07	28	AE169419	AE160419
		3Ø600	05	35	AE169417	AE160417
	4P5W	3ØY120/208	09	15	AE169521	AE160521
		3ØY277/480	07	28	AE169519	AE160419
		3ØY347/600	05	35	AE169517	AE160517

100	2P3W	125	04	7.5	A0189316	–
		250	06	14	A0189318	–
		480	07	28	A0189319	–
	3P4W	125/240	12	7.5 @120V 14 @ 240V	A0189424	–
		3Ø250	09	30	A0189421	–
		3Ø480	07	60	A0189419	–
		3Ø600	05	75	A0189417	–
	4P5W	3ØY120/208	09	30	A0189521	–
		3ØY277/480	07	60	A0189519	–
		3ØY347/600	05	75	A0189517	–

A0189419

** Especially designed for refridgerated containers ONLY.*

MECHANICAL INTERLOCKS STANDARD SWITCH VERSION WITH MCB's (Mini Circuit Breakers)

AMPS	Poles & Wires	MCB Trip Curve **	Voltage AC	Clock Position of Ground Contact	Horsepower Ratings	DUST TIGHT IP67 WATERTIGHT	IP44 SPLASH PROOF
20	2P3W	1 Pole C Curve	125	04	0.75	AL119316UD	AL110316UD
			250	06	2	AL119318UD	AL110318UD
			480	07	4	AL119319UD	AL110319UD
	3P4W	3 Pole C Curve	125/240	12	.75 @ 120V 2 @ 240V	AL119424SA	AL110424SA
			3Ø250	09	5	AL119421SA	AL110421SA
			3Ø480	07	10	AL119419SA	AL110419SA
			3Ø600	05	14	AL119417SA	AL110417SA
	4P5W	3 Pole C Curve	3ØY120/208	09	5	AL119521TA	AL110521TA
			3ØY277/480	07	10	AL119519TA	AL110519TA
			3ØY347/600	05	14	AL119517TA	AL110517TA

30	2P3W	1 Pole C Curve	125	04	1.5	AL139316UD	AL130316UD
			250	06	3.5	AL139318UD	AL130318UD
			480	07	6	AL139319UD	AL130319UD
	3P4W	3 Pole C Curve	125/240	12	1.5 @120V 3.5 @ 240V	AL139424SA	AL130424SA
			3Ø250	09	7.5	AL139421SA	AL130421SA
			3Ø480	07	15	AL139419SA	AL130419SA
			3Ø600	05	20	AL139417SA	AL130417SA
	4P5W	3 Pole C Curve	3ØY120/208	09	7.5	AL139521TA	AL130521TA
			3ØY277/480	07	15	AL139519TA	AL130519TA
			3ØY347/600	05	20	AL139517TA	AL130517TA
32	3P4W		380 50Hz 440 60Hz	03	12	AL139415SA*	–
60	2P3W	1 Pole C Curve	125	04	3.5	AL169316UD	AE160316UD
			250	06	7.5	AL169318UD	AE160318UD
			480	07	13.5	AL169319UD	AE160319UD
	3P4W	3 Pole C Curve	125/240	12	3.5 @ 120V 7.5 @240V	AL169424SA	AE160424SA
			3Ø250	09	15	AL169421SA	AE160421SA
			3Ø480	07	28	AL169419SA	AE160419SA
			3Ø600	05	35	AL169417SA	AE160417SA
	4P5W	3 Pole C Curve	3ØY120/208	09	15	AL169521TA	AE160521TA
			3ØY277/480	07	28	AL169519TA	AE160419TA
			3ØY347/600	05	35	AL169517TA	AE160517TA

** Especially designed for refridgerated containers ONLY. ** C Curve means the MCB trips between 5-10 times full load current.*

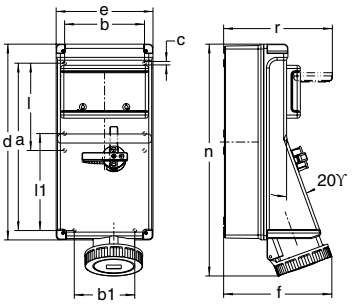

Drawing C

AMPS N.A.	AMPS Int'l	Poles & Wires	UOM	DIMENSIONS a	b	b1	c	d	e	IP44 f	IP67 f	l	l1	IP44 n	IP67 n	r
20	16	2P3W	inch	12.44	5.94	4.49	0.26	14.57	7.20	7.17	7.60	6.50	7.20	15.79	15.91	8.11
			mm	316	151	114	6.5	370	183	182	193	165	183	401	404	206
20	16	3P4W	inch	12.44	5.94	4.49	0.26	14.57	7.20	7.36	7.64	6.50	7.20	15.91	15.94	8.11
			mm	316	151	114	6.5	370	183	187	194	165	183	404	405	206
20	16	4P5W	inch	12.44	5.94	4.49	0.26	14.57	7.20	7.24	7.72	6.50	7.20	15.94	16.14	8.11
			mm	316	151	114	6.5	370	183	184	196	165	183	405	410	206
30	32	2P3W	inch	12.44	5.94	4.49	0.26	14.57	7.20	7.36	7.91	6.50	7.20	16.34	16.46	8.11
			mm	316	151	114	6.5	370	183	187	201	165	183	415	418	206
30	32	3P4w	inch	12.44	5.94	4.49	0.26	14.57	7.20	7.36	7.91	6.50	7.20	16.34	16.46	8.11
			mm	316	151	114	6.5	370	183	187	201	165	183	415	418	206
30	32	4P5W	inch	12.44	5.94	4.49	0.26	14.57	7.20	7.44	7.91	6.50	7.20	16.42	16.46	8.11
			mm	316	151	114	6.5	370	183	189	201	165	183	417	418	206
60	63	2P3W	inch	12.44	5.94	4.49	0.26	14.57	7.20	7.72	8.23	6.50	7.20	17.01	17.44	8.11
			mm	316	151	114	6.5	370	183	196	209	165	183	432	443	206
60	63	3P4w	inch	12.44	5.94	4.49	0.26	14.57	7.20	7.72	8.23	6.50	7.20	17.01	17.44	8.11
			mm	316	151	114	6.5	370	183	196	209	165	183	432	443	206
60	63	4P5W	inch	12.44	5.94	4.49	0.26	14.57	7.20	7.72	8.23	6.50	7.20	17.01	17.44	8.11
			mm	316	151	114	6.5	370	183	196	209	165	183	432	443	206

MECHANICAL INTERLOCKS COMPACT VERSION

AMPS	Poles & Wires	Voltage AC	Clock Position of Ground Contact	Horsepower Ratings	DUST TIGHT IP67 WATERTIGHT	IP44 SPLASH PROOF
20	2P3W	125	04	0.75	AT119316	AT110316
		250	06	2	AT119318	AT110318
		480	07	4	AT119319	AT110319
	3P4W	125/240	12	.75 @ 120V 2 @ 240V	AT119424	AT110424
		3Ø250	09	5	AT119421	AT110421
		3Ø480	07	10	AT119419	AT110419
		3Ø600	05	14	AT119417	AT110417
	4P5W	3ØY120/208	09	5	AT119521	AT110521
		3ØY277/480	07	10	AT119519	AT110519
		3ØY347/600	05	14	AT119517	AT110517

30	2P3W	125	04	1.5	AT139316	AT130316
		250	06	3.5	AT139318	AT130318
		480	07	6	AT139319	AT130319
	3P4W	125/240	12	1.5 @120V 3.5 @ 240V	AT139424	AT130424
		3Ø250	09	7.5	AT139421	AT130421
		3Ø480	07	15	AT139419	AT130419
		3Ø600	05	20	AT139417	AT130417
	4P5W	3ØY120/208	09	7.5	AT139521	AT130521
		3ØY277/480	07	15	AT139519	AT130519
		3ØY347/600	05	20	AT139517	AT130517

32	3P4W	380 50Hz 440 60Hz	03	12	AT139415*	–

** Especially designed for refridgerated containers ONLY.*

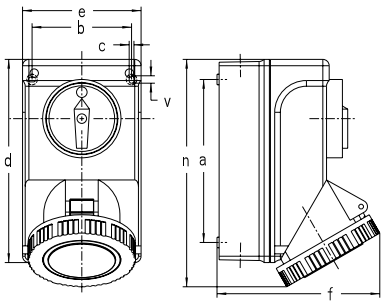

Drawing D

AMPS N.A.	AMPS Int'l	Poles & Wires	UOM	a	b	c	d	e	IP44 f	IP67 f	IP44 n	IP67 n	v
20	16	2P3W	inch	5.00	3.07	0.18	6.54	3.82	4.57	4.72	7.28	7.28	0.28
			mm	127	78	4.5	166	97	116	120	185	185	7
20	16	3P4W	inch	5.00	3.07	0.18	6.54	3.82	4.72	4.92	7.28	7.28	0.28
			mm	127	78	4.5	166	97	120	125	185	185	7
20	16	4P5W	inch	5.00	3.07	0.18	6.54	3.82	4.92	5.20	7.28	7.28	0.28
			mm	127	78	4.5	166	97	125	132	185	185	7
30	32	2P3W	inch	6.06	3.70	0.18	7.60	4.45	5.71	6.06	8.46	8.46	0.28
			mm	154	94	4.5	193	113	145	154	215	215	7
30	32	3P4w	inch	6.06	3.70	0.18	7.60	4.45	5.71	6.06	8.46	8.46	0.28
			mm	154	94	4.5	193	113	145	154	215	215	7
30	32	4P5W	inch	6.06	3.70	0.18	7.60	4.45	5.83	6.06	8.46	8.46	0.28
			mm	154	94	4.5	193	113	148	154	215	215	7

MECHANICAL INTERLOCKS COMPACT VERSION WITH MCB's (Mini Circuit Breakers)

AMPS	Poles & Wires	MCB Trip Curve **	Voltage AC	Clock Position of Ground Contact	Horsepower Ratings	DUST TIGHT IP67 WATERTIGHT	IP44 SPLASH PROOF
20	2P3W	1 Pole C Curve	125	04	0.75	AU119316UD	AU110316UD
			250	06	2	AU119318UD	AU110318UD
			480	07	4	AU119319UD	AU110319UD
	3P4W	3 Pole C Curve	125/240	12	.75 @ 120V 2 @ 240V	AU119424SA	AU110424SA
			3Ø250	09	5	AU119421SA	AU110421SA
			3Ø480	07	10	AU119419SA	AU810419SA
			3Ø600	05	14	AU119417SA	AU110417SA
	4P5W	3 Pole C Curve	3ØY120/208	09	5	AU119521TA	AU110521TA
			3ØY277/480	07	10	AU119519TA	AU110519TA
			3ØY347/600	05	14	AU119517TA	AU110517TA

30	2P3W	1 Pole C Curve	125	04	1.5	AU139316UD	AU130316UD
			250	06	3.5	AU139318UD	AU130318UD
			480	07	6	AU139319UD	AU130319UD
	3P4W	3 Pole C Curve	125/240	12	1.5 @120V 3.5 @ 240V	AU139424SA	AU130424SA
			3Ø250	09	7.5	AU139421SA	AU130421SA
			3Ø480	07	15	AU139419SA	AU130419SA
			3Ø600	05	20	AU139417SA	AU130417SA
	4P5W	3 Pole C Curve	3ØY120/208	09	7.5	AU139521TA	AU130521TA
			3ØY277/480	07	15	AU139519TA	AU130519TA
			3ØY347/600	05	20	AU139517TA	AU130517TA
32	3P4W	3 Pole C Curve	380 50Hz 440 60Hz	03	12	AU139415SA*	–

** Especially designed for refridgerated containers ONLY.*

*** C Curve means the MCB trips between 5-10 times full load current.*

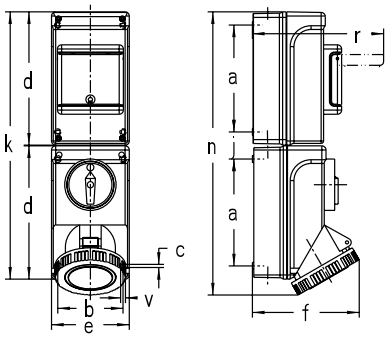

Drawing E

AMPS N.A.	AMPS Int'l	Poles & Wires	UOM	a	b	c	d	e	f	IP44 f	IP67 i	k	n	IP44 n	IP67 r	r
20	16	2P3W	inch	5.00	3.07	0.18	6.54	3.82	4.57	4.72	1.54	13.11	13.86	13.86	6.97	0.28
			mm	127	78	4.5	166	97	116	120	39	333	352	352	177	7
20	16	3P4W	inch	5.00	3.07	0.18	6.54	3.82	4.72	4.92	1.54	13.11	13.86	13.86	6.97	0.28
			mm	127	78	4.5	166	97	120	125	39	333	352	352	177	7
20	16	4P5W	inch	5.00	3.07	0.18	6.54	3.82	4.92	5.20	1.54	13.11	13.86	13.86	6.97	0.28
			mm	127	78	4.5	166	97	125	132	39	333	352	352	177	7
30	32	2P3W	inch	6.06	3.70	0.18	7.60	4.45	5.71	6.06	1.54	15.24	16.10	16.10	7.52	0.28
			mm	154	94	4.5	193	113	145	154	39	387	409	409	191	7
30	32	3P4w	inch	6.06	3.70	0.18	7.60	4.45	5.71	6.06	1.54	15.24	16.10	16.10	7.52	0.28
			mm	154	94	4.5	193	113	145	154	39	387	409	409	191	7
30	32	4P5W	inch	6.06	3.70	0.18	7.60	4.45	5.83	6.06	1.54	15.24	16.10	16.10	7.52	0.28
			mm	154	94	4.5	193	113	148	154	39	387	409	409	191	7

1 2 3 4 5 6 7 8 9 10 11

MECHANICAL INTERLOCKS CIRCUIT BREAKER VERSION

AMPS	Poles & Wires	Voltage AC	Clock Position of Ground Contact	DUST TIGHT IP67 WATERTIGHT	IP44 SPLASH PROOF
20	2P3W	125	04	AJ119316SH	AJ110316SH
		250	06	AJ119318SH	AJ110318SH
		480	07	AJ119319SH	AJ110319SH
	3P4W	125/240	12	AJ119424SH	AJ110424SH
		3Ø250	09	AJ119421SH	AJ110421SH
		3Ø480	07	AJ119419SH	AJ110419SH
	4P5W	3ØY120/208	09	AJ119521SH	AJ110521SH
		3ØY277/480	07	AJ119519SH	AJ110519SH
30	2P3W	125	04	AJ1139316SH	AJ130316SH
		250	06	AJ1139318SH	AJ130318SH
		480	07	AJ139319SH	AJ130319SH
	3P4W	125/240	12	AJ139424SH	AJ130424SH
		3Ø250	09	AJ139421SH	AJ130421SH
		3Ø480	07	AJ139419SH	AJ130419SH
	4P5W	3ØY120/208	09	AJ139521SH	AJ130521SH
		3ØY277/480	07	AJ139519SH	AJ130519SH
32	3P4W	380 50Hz 440 60Hz	03	AJ139415SH*	–
60	2P3W	125	04	AJ169316SH	AJ160316SH
		250	06	AJ169318SH	AJ160318SH
		480	07	AJ169319SH	AJ160319SH
	3P4W	125/240	12	AJ169424SH	AJ160424SH
		3Ø250	09	AJ169421SH	AJ160421SH
		3Ø480	07	AJ169419SH	AJ160419SH
	4P5W	3ØY120/208	09	AJ169521SH	AJ160521SH
		3ØY277/480	07	AJ169519SH	AJ160519SH
100	2P3W	125	04	AO189316SH	–
		250	06	AO189316SH	–
		480	07	AO189319SH	–
	3P4W	125/240	12	AO189424SH	–
		3Ø250	09	AO189421SH	–
		3Ø480	07	AO189419SH	–
	4P5W	3ØY120/208	09	AO189521SH	–
		3ØY277/480	07	AO189519SH	–

** Especially designed for refridgerated containers ONLY.*

The Circuit Breaker Mechanical Interlock integrates a circuit breaker (which takes the place of a switch) and receptacle in a non-metallic enclosure that meets NEMA type 4X (Washdown, Corrosion Resistant) requirements.

- Switched, Circuit Breaker Interlock Receptacles are available in 20, 30, 60 & 100 Amp (North American Ratings) and 16, 32, 63, & 125 Amp (International Ratings)
- UL489 Listed 22KAIC protection

ELECTRICAL

Dialectric Voltage Withstand	3,000 Volts
Maximum Working Voltage	600 Volts RMS (switch version) 480 Volts RMS (circuit breaker version)
Current Interrupting	Certified for current interrupting at full rated current and voltage.
Short Circuit Withstand Rating	Suitable for use on a circuit capable of delivering not more than 10,000 RMS symmetrical amperes at the voltage rating of the receptacle.
Operations	Mechanical: 10,000 cycles
Electrical:	6,000 cycles

MECHANICAL

Impact Resistance	In accordance with UL 746C
Terminal Identification	In accordance with UL, CSA and international conventions.
Product Identification	Identification, ratings and color code in accordance with UL, CSA and IEC requirements.
Lockout/Tagout	"ON" and "OFF" lockout/tagout capability at switch handle. Complies with OSHA Reg. 29CFR 1910.147
Mounting	
Switch Version	Internal or external adjustable mounting feet
Compact Version	Internal mounting
Circuit Breaker Version	Internal or external adjustable mounting feet

MATERIALS

Enclosure (all exteriorcomponents)	UL94-5VA/V0, UV stabilized, impact modified ValoxR.
Contact Carrier	Molded arc resistant UL94-V0 thermoplastic
Gaskets Neoprene or EPDM	
Contacts (NEMA 4X, Watertight IP67)	Brass, Nickel Plated
Contacts (Splashproof (IP44)	Brass
Hardware (screws & springs)	Steel with zinc-plated blue chromate or nickel plating.

ENVIRONMENTAL

Moisture Resistance	Watertight IP67 (Washdown) - UL Type 4X Splashproof IP44
Flammability	UL94-5VA & V0 Classifications
Operating Temperatures	Maximum Continuous: 60°C (140°F) Minimum Continuous: -40°C (-40°F)
UV Resistance	UV stabilized material
Chemicals	Resists most standard industrial hydrocarbons, acids, bases and solvents.

APPROVALS & COMPLIANCES

UL 508 (switch version) Motor Disconnect
UL 508 (compact version) Manual Motor Controller
UL 231 & UL 489 (circuit breaker version)
UL1682 & 1686
CSA C22.2 No. 14, 182.1
IEC60309-1 & IEC60309-2

Mechanical Interlocks Standard Switch Version

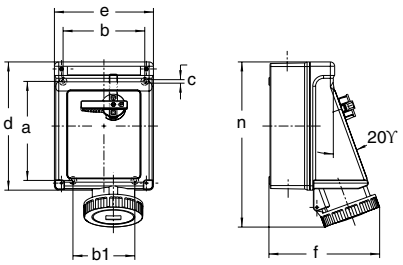

Drawing A

AMPS N.A.	AMPS Int'l	Poles & Wires	UOM	DIMENSIONS a	b	b1	c	d	e	IP44 f	IP67 f	IP44 n	IP67 n
20	16	2P3W	inch	7.20	5.94	4.49	0.26	9.33	7.20	7.17	7.60	10.55	10.63
			mm	183	151	114	6.5	237	183	182	193	268	270
20	16	3P4W	inch	7.20	5.94	4.49	0.26	9.33	7.20	7.36	7.64	10.63	10.71
			mm	183	151	114	6.5	237	183	187	194	270	272
20	16	4P5W	inch	7.20	5.94	4.49	0.26	9.33	7.20	7.24	7.72	10.75	10.91
			mm	183	151	114	6.5	237	183	184	196	273	277
30	32	2P3W	inch	7.20	5.94	4.49	0.26	9.33	7.20	7.36	7.91	11.10	11.22
			mm	183	151	114	6.5	237	183	187	201	282	285
30	32	3P4w	inch	7.20	5.94	4.49	0.26	9.33	7.20	7.36	7.91	11.10	11.22
			mm	183	151	114	6.5	237	183	187	201	282	285
30	32	4P5W	inch	7.20	5.94	4.49	0.26	9.33	7.20	7.44	7.91	11.18	11.38
			mm	183	151	114	6.5	237	183	189	201	284	289
60	63	2P3W	inch	7.20	5.94	4.49	0.26	9.33	7.20	7.72	8.23	11.89	12.17
			mm	183	151	114	6.5	237	183	196	209	302	309
60	63	3P4w	inch	7.20	5.94	4.49	0.26	9.33	7.20	7.72	8.23	11.89	12.17
			mm	183	151	114	6.5	237	183	196	209	302	309
60	63	4P5W	inch	7.20	5.94	4.49	0.26	9.33	7.20	7.72	8.23	11.89	12.17
			mm	183	151	114	6.5	237	183	196	209	302	309

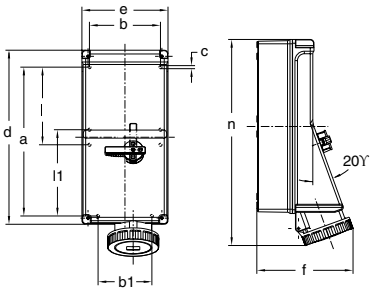

Drawing B

AMPS N.A.	AMPS Int'l	Poles & Wires	UOM	DIMENSIONS a	b	b1	c	d	e	IP67 f	IP67 n
100	125	2P3W	inch	12.44	5.94	4.96	0.26	14.57	7.20	9.57	17.72
			mm	316	151	126	6.5	370	183	243	450
100	125	3P4W	inch	12.44	5.94	4.96	0.26	14.57	7.20	9.57	17.72
			mm	316	151	126	6.5	370	183	243	450
100	125	4P5W	inch	12.44	5.94	4.96	0.26	14.57	7.20	9.57	17.72
			mm	316	151	126	6.5	370	183	243	450

1 2 3 4 5 6 7 8 9 10 11

MECHANICAL INTERLOCKS STANDARD SWITCH VERSION

AMPS	Poles & Wires	Voltage AC	Clock Position of Ground Contact	DUST TIGHT IP67 WATERTIGHT	IP44 SPLASH PROOF
16	2P3W	110	04	AE119304	AE110304
		230	06	AE119306	AE110306
		400	09	AE119309	AE110309
	3P4W	110	04	AE119404	AE110404
		230	09	AE119409	AE110409
		400	06	AE119406	AE110406
		500	07	AE119407	AE110407
	4P5W	110	04	AE119504	AE110504
		230	09	AE119509	AE110509
		400	06	AE119	AE110
32	2P3W	110	04	AE139304	AE130304
		230	06	AE139306	AE130306
		400	09	AE139309	AE130309
	3P4W	110	04	AE139404	AE130404
		230	09	AE139409	AE130409
		400	06	AE139406	AE130406
		500	07	AE139407	AE130407
	4P5W	110	04	AE139504	AE130504
		230	09	AE139509	AE130509
		400	06	AE139	AE130
32	3P4W	380 50Hz 440 60Hz	03	AE139403*	–
63	2P3W	110	04	AE169304	AE160304
		230	06	AE169306	AE160306
		400	09	AE169309	AE160309
	3P4W	110	04	AE169404	AE160404
		230	09	AE169409	AE160409
		400	06	AE169406	AE160406
		500	07	AE169407	AE160407
	4P5W	110	04	AE169504	AE160504
		230	09	AE169509	AE160509
		400	06	AE169	AE160
125	2P3W	110	04	AO179304	–
		230	06	AO179306	–
		400	09	AO179309	–
	3P4W	110	04	AO179404	–
		230	09	AO179409	–
		400	06	AO179406	–
		500	07	AO179407	–
	4P5W	110	04	AO179504	–
		230	09	AO179509	–
		400	06	AO179	–

** Especially designed for refridgerated containers ONLY.*

MECHANICAL INTERLOCKS COMPACT VERSION

AMPS	Poles & Wires	Voltage AC	Clock Position of Ground Contact	DUST TIGHT IP67 WATERTIGHT	IP44 SPLASH PROOF
16	2P3W	110	04	AT119304	AT110304
		230	06	AT119306	AT110306
		400	09	AT119309	AT110309
	3P4W	110	04	AT119404	AT110404
		230	09	AT119409	AT110409
		400	06	AT119406	AT110406
		500	07	AT119407	AT110407
	4P5W	110	04	AT119504	AT110504
		230	09	AT119509	AT110509
		400	06	AT119	AT110
32	2P3W	110	04	AT139304	AT130304
		230	06	AT139306	AT130306
		400	09	AT139309	AT130309
	3P4W	110	04	AT139404	AT130404
		230	09	AT139409	AT130409
		400	06	AT139406	AT130406
		500	07	AT139407	AT130407
	4P5W	110	04	AT139504	AT130504
		230	09	AT139509	AT130509
		400	06	AT139	AT130
32	3P4W	380 50Hz 440 60Hz	03	AT139403*	–

** Especially designed for refridgerated containers ONLY.*

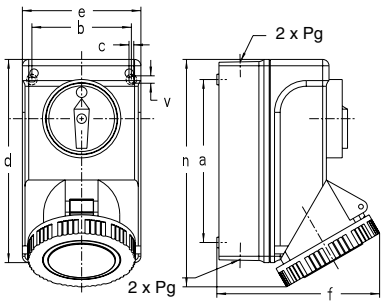

AMPS N.A.	AMPS Int'l	Poles & Wires	UOM	DIMENSIONS a	b	c	d	e	IP44 f	IP67 f	IP44 n	IP67 n	v
20	16	2P3W	inch	5.00	3.07	0.18	6.54	3.82	4.57	4.72	7.28	7.28	0.28
			mm	127	78	4.5	166	97	116	120	185	185	7
20	16	3P4W	inch	5.00	3.07	0.18	6.54	3.82	4.72	4.92	7.28	7.28 0	28
			mm	127	78	4.5	166	97	120	125	185	185	7
20	16	4P5W	inch	5.00	3.07	0.18	6.54	3.82	4.92	5.20	7.28	7.28	0.28
			mm	127	78	4.5	166	97	125	132	185	185	7
30	32	2P3W	inch	6.06	3.70	0.18	7.60	4.45	5.71	6.06	8.46	8.46	0.28
			mm	154	94	4.5	193	113	145	154	215	215	7
30	32	3P4W	inch	6.06	3.70	0.18	7.60	4.45	5.71	6.06	8.46	8.46	0.28
			mm	154	94	4.5	193	113	145	154	215	215	7
30	32	4P5W	inch	6.06	3.70	0.18	7.60	4.45	5.83	6.06	8.46	8.46	0.28
			mm	154	94	4.5	193	113	148	154	215	215	7

1 2 3 4 5 6 7 8 9 10 11

MECHANICAL INTERLOCKS CIRCUIT BREAKER VERSION

AMPS	Poles & Wires	Voltage AC	Clock Position of Ground Contact	DUST TIGHT IP67 WATERTIGHT	IP44 SPLASH PROOF
16	2P3W	110	04	AJ119304SH	AJ110304SH
		230	06	AJ119306SH	AJ110306SH
		400	09	AJ119309SH	AJ110309SH
	3P4W	110	04	AJ119404SH	AJ110404SH
		230	09	AJ119409SH	AJ110409SH
		400	06	AJ119406SH	AJ110406SH
	4P5W	110	04	AJ119504SH	AJ110504SH
		230	09	AJ119509SH	AJ110509SH
		400	06	AJ119SH	AJ110SH
32	2P3W	110	04	AJ139304SH	AJ130304SH
		230	06	AJ139306SH	AJ130306SH
		400	09	AJ139309SH	AJ130309SH
	3P4W	110	04	AJ139404SH	AJ130404SH
		230	09	AJ139409SH	AJ130409SH
		400	06	AJ139406SH	AJ130406SH
	4P5W	110	04	AJ139504SH	AJ130504SH
		230	09	AJ139509SH	AJ130509SH
		400	06	AJ139SH	AJ130SH
32	3P4W	380 50Hz 440 60Hz	03	AE139403*	–
63	2P3W	110	04	AJ169304SH	AJ160304SH
		230	06	AJ169306SH	AJ160306SH
		400	09	AJ169309SH	AJ160309SH
	3P4W	110	04	AJ169404SH	AJ160404SH
		230	09	AJ169409SH	AJ160409SH
		400	06	AJ169406SH	AJ160406SH
	4P5W	110	04	AJ169504SH	AJ160504SH
		230	09	AJ169509SH	AJ160509SH
		400	06	AJ169SH	AJ160SH
125	2P3W	110	04	AO179304SH	–
		230	06	AO179306SH	–
		400	09	AO179309SH	–
	3P4W	110	04	AO179404SH	–
		230	09	AO179409SH	–
		400	06	AO179406SH	–
	4P5W	110	04	AO179504SH	–
		230	09	AO179509SH	–
		400	06	AO179SH	–

** Especially designed for refridgerated containers ONLY.*

PLUGS with Trumpet/Bell Gland

AMPS		# of	DIMENSIONS			CORD GRIP RANGE	
N.A.	Intl.	WIRES	UOM	A	B	N. American	International
20	16	3	inch	4.96	2.83	0.275 - 0.530	0.275 - 0.530
			mm	126	72	7.0 - 13.5	7.0 - 13.5
20	16	4	inch	5.2	3.19	0.395 - 0.825	0.275 - 0.630
			mm	132	81	10.0 - 21.0	7.0 - 16.0
20	16	5	inch	5.2	3.46	0.395 - 0.825	0.275 - 0.630
			mm	132	88	10.0 - 21.0	7.0 - 16.0
30	32	3	inch	6.14	3.78	0.395 - 0.825	0.395 - 0.825
			mm	156	96	10.0 - 21.0	10.0 - 21.0
30	32	4	inch	6.14	3.78	0.650 - 1.10	0.935 - 0.825
			mm	156	96	16.5 - 28.0	10.0 - 21.0
30	32	5	inch	6.14	4.06	0.650 - 1.50	0.395 - 0.825
			mm	156	103	16.5 - 28.0	10.0 - 21.0
60	63	3, 4 & 5	inch	9.57	4.33	0.650 - 1.50	0.650 - 1.50
			mm	243	110	16.5 - 38.0	16.5 - 38.0
100	125	3, 4 & 5	inch	12.4	5.12	0.950 - 1.90	0.950 - 1.90
			mm	315	130	24.0 - 48.0	24.0 - 48.0

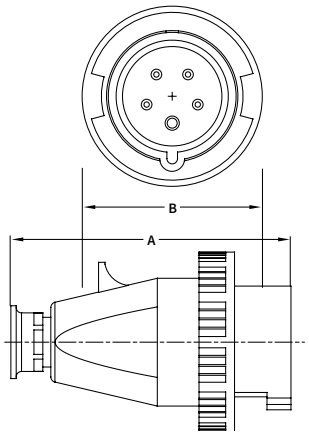

DUST TIGHT
IP67
WATERTIGHT

PLUGS with Trumpet/Bell Gland

AMPS		# of	DIMENSIONS			CORD GRIP RANGE	
N.A.	Intl.	WIRES	UOM	A	B	N. American	International
20	16	3	inch	4.84	2.36	0.275 - 0.530	0.275 - 0.530
			mm	123	60	7.0 - 13.5	7.0 - 13.5
20	16	4	inch	5.16	2.68	0.395 - 0.825	0.275 - 0.630
			mm	131	68	10.0 - 21.0	7.0 - 16.0
20	16	5 & 7	inch	5.16	2.95	0.395 - 0.825	0.275 - 0.630
			mm	131	75	10.0 - 21.0	7.0 - 16.0
30	32	3	inch	6.10	3.11	0.395 - 0.825	0.395 - 0.825
			mm	155	79	10.0 - 21.0	10.0 - 21.0
30	32	4	inch	6.10	3.11	0.650 - 1.10	0.395 - 0.825
			mm	155	79	16.5 - 28.0	10.0 - 21.0
30	32	5 & 7	inch	6.10	3.46	0.650 - 1.10	0.395 - 0.825
			mm	155	88	16.5 - 28.0	10.0 - 21.0
60	63	3, 4, & 5	inch	9.45	3.82	0.650 - 1.50	0.650 - 1.50
			mm	240	97	16.5 - 38.0	16.5 - 38.0

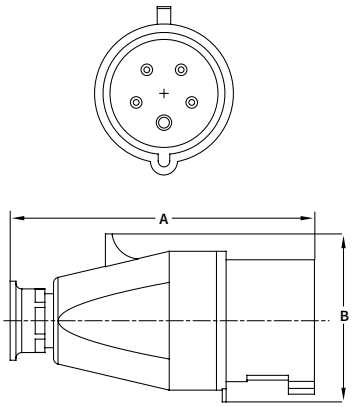

IP44
SPLASH PROOF

PLUGS with Flexible Cable Sleeve

AMPS		# of	DIMENSIONS			CORD GRIP RANGE	
N.A.	Intl.	WIRES	UOM	A	B	N. American	International
20	16	3	inch	5.63	2.36	0.275 - 0.675	0.275 - 0.675
			mm	143	60	7.0 - 17.0	7.0 - 17.0
20	16	4	inch	5.79	2.68	0.315 - 0.800	0.315 - 0.800
			mm	147	68	8.0 - 20.0	8.0 - 20.0
20		16	5 & 7	inch	6.02 2.95	0.315 - 0.800	0.315 - 0.800
			mm	153	75	8.0 - 20.0	8.0 - 20.0
30	32	3	inch	7.13	3.11	0.590 - 0.950	0.435 - 0.950
			mm	181	79	15.0 - 24.0	11.0 - 24.0
30	32	4	inch	7.13	3.11	0.590 - 0.950	0.435 - 0.95
			mm	181	79	15.0 - 24.0	11.0 - 24.0
30	32	5 & 7	inch	7.13	3.46	0.590 - 0.950	0.435 - 0.95
			mm	181	88	15.0 - 24.0	11.0 - 24.0
60	63	3, 4, & 5	inch	9.92	3.82	0.635 - 1.30	0.600 - 1.30
			mm	252	97	16.0 - 33.0	15.0 - 33.0

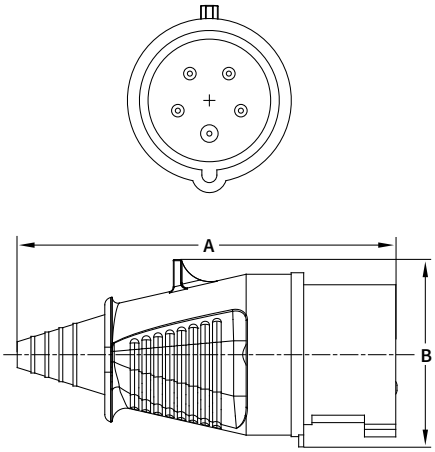

IP44
SPLASH PROOF

NOTE: Dimensions are subject to change without notice. Consult a member of our sales team for the most current information +1 (800) 925-8437.

CONNECTORS (Couplers) with Trumpet / Bell Gland

DUST TIGHT IP67 WATERTIGHT

AMPS		# of	DIMENSIONS				CORD GRIP RANGE	
N.A.	Intl.	WIRES	UOM	A	B	C	N. American	International
20	16	3	inch	5.35	2.83	3.07	0.275 - 0.530	0.275 - 0.530
			mm	136	72	78	7.0 - 13.5	7.0 - 13.5
20	16	4	inch	5.63	3.19	3.35	0.395 - 0.825	0.275 - 0.630
			mm	143	81	85	10.0 - 21.0	7.0 - 16.0
20	16	5	inch	5.63	3.46	3.58	0.395 - 0.825	0.275 - 0.630
			mm	143	88	91	10.0 - 21.0	7.0 - 16.0
30	32	3	inch	6.97	3.78	3.78	0.395 - 0.825	0.395 - 0.825
			mm	177	96	96	10.0 - 21.0	10.0 - 21.0
30	32	4	inch	6.97	3.78	3.78	0.650 - 1.10	0.395 - 0.825
			mm	177	96	96	16.5 - 28.0	10.0 - 21.0
30	32	5	inch	6.97	4.06	4.13	0.650 - 1.10	0.395 - 0.825
			mm	177	103	105	16.5 - 28.0	10.0 - 21.0
60	63	3, 4, & 5	inch	10.0	4.33	4.61	0.650 - 1.50	0.650 - 1.50
			mm	255	110	117	16.5 - 38.0	16.5 - 38.0
100	125	3, 4, & 5	inch	13.1	5.12	5.12	0.950 - 1.90	0.950 - 1.90
			mm	332	130	130	24.0 - 48.0	24.0 - 48.0

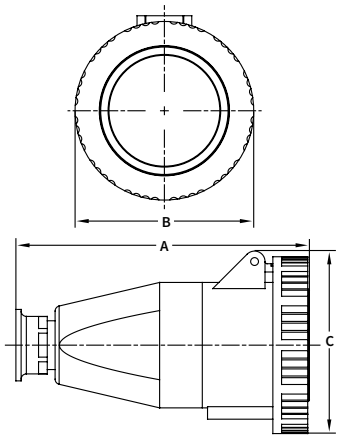

CONNECTORS (Couplers) with Trumpet / Bell Gland

IP44 SPLASH PROOF

AMPS		# of	DIMENSIONS				CORD GRIP RANGE	
N.A.	Intl.	WIRES	UOM	A	B	C	N. American	International
20	16	3	inch	5.32	2.01	2.68	0.275 - 0.530	0.275 - 0.530
			mm	135	51	68	7.0 - 13.5	7.0 - 13.5
20	16	4	inch	5.95	2.56	3.35	0.395 - 0.825	0.275 - 0.630
			mm	151	65	85	10.0 - 21.0	7.0 - 16.0
20	16	5 & 7	inch	5.95	2.56	3.35	0.395 - 0.825	0.275 - 0.630
			mm	151	65	85	10.0 - 21.0	7.0 - 16.0
30	32	3	inch	6.73	2.83	3.58	0.395 - 0.825	0.395 - 0.825
			mm	171	72	91	10.0 - 21.0	10.0 - 21.0
30	32	4	inch	6.73	2.83	3.58	0.650 - 1.10	0.395 - 0.825
			mm	171	72	91	16.5 - 28.0	10.0 - 21.0
30	32	5 & 7	inch	6.73	2.83	3.86	0.650 - 1.10	0.395 - 0.825
			mm	171	72	98	16.5 - 28.0	10.0 - 21.0
60	63	3, 4, & 5	inch	10.0	3.78	4.49	0.650 - 1.50	0.650 - 1.50
			mm	255	96	114	16.5 - 38.0	16.5 - 38.0

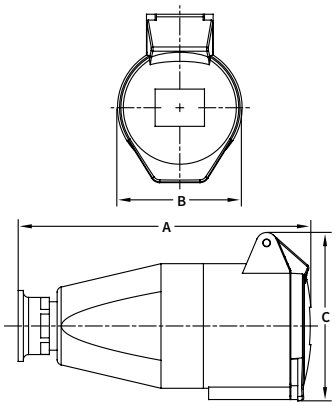

CONNECTORS (Couplers) with Flexible Cable Sleeve

IP44 SPLASH PROOF

AMPS		# of	DIMENSIONS				CORD GRIP RANGE	
N.A.	Intl.	WIRES	UOM	A	B	C	N. American	International
20	16	3	inch	6.06	2.01	2.69	0.275 - 0.675	0.275 - 0.675
			mm	154	51	68.4	7.0 - 17.0	7.0 - 17.0
20	16	4	inch	6.54	2.56	2.97	0.315 - 0.800	0.315 - 0.800
			mm	166	65	75.4	8.0 - 20.0	8.0 - 20.0
20	16	5 & 7	inch	6.54	2.56	3.29	0.315 - 0.800	0.315 - 0.800
			mm	166	65	83.5	8.0 - 20.0	8.0 - 20.0
30	32	3	inch	7.72	2.83	3.54	0.590 - 0.950	0.435 - 0.950
			mm	196	72	90	15.0 - 24.0	11.0 - 24.0
30	32	4	inch	7.72	2.83	3.54	0.590 - 0.950	0.435 - 0.95
			mm	196	72	90	15.0 - 24.0	11.0 - 24.0
30	32	5 & 7	inch	7.72	2.83	3.78	0.590 - 0.950	0.435 - 0.95
			mm	196	72	96	15.0 - 24.0	11.0 - 24.0
60	63	3, 4, & 5	inch	10.5	3.78	4.41	0.635 - 1.30	0.600 - 1.30
			mm	266	96 112		16.0 - 33.0	15.0 - 33.0

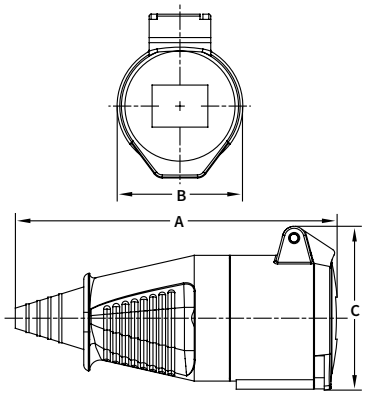

NOTE: Dimensions are subject to change without notice. Consult a member of our sales team for the most current information +1 (800) 925-8437.

RECEPTACLES (Panel Sockets) Straight

AMPS		# of	DIMENSIONS								
N.A.	Intl.	WIRES	UOM	A	B	C	D	E	F	G	H
20	16	3	inch	2.82	2.05	1.10	1.81	2.44	2.44	1.85	1.85
			mm	71.5	52	28	46	62	62	47	47
20	16	4	inch	31.9	2.05	1.10	2.36	2.95	2.95	2.36	2.36
			mm	81	52	28	60	75	75	60	60
20	16	5	inch	3.46	2.05	1.10	2.36	2.95	2.95	2.36	2.36
			mm	88	52	28	60	75	75	60	60
30	32	3 & 4	inch	3.78	2.56	1.06	2.36	2.95	2.95	2.36	2.36
			mm	96	65	27	60	75	75	60	60
30	32	5	inch	4.06	2.56	1.06	2.36	2.95	2.95	2.36	2.36
			mm	103	65	27	60	75	75	60	60
60	63	3, 4, & 5	inch	4.29	3.27	2.05	3.54	3.94	4.21	3.03	3.35
			mm	109	83	52	90	100	107	77	85
100	125	3, 4, & 5	inch	5.12	3.78	2.52	3.54	4.49	4.49	3.54	3.54
			mm	130	96	64	90	114	114	90	90

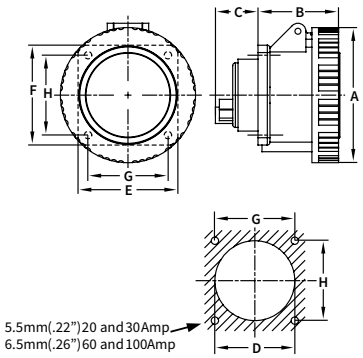

DUST TIGHT
IP67
WATERTIGHT

RECEPTACLES (Panel Sockets) Angled 15°

AMPS		# of	DIMENSIONS								
N.A.	Intl.	WIRES	UOM	A	B	C	D	E	F	G	H
20	16	3	inch	2.82	1.93	1.61	2.01	2.44	2.68	1.85	1.85
			mm	71.5	49	41	51	62	68	47	47
20	16	4	inch	3.19	2.05	1.50	2.87	3.62	3.94	3.03	3.35
			mm	81	52	38	73	92	100	77	85
20	16	5	inch	3.46	2.05	1.50	2.87	3.62	3.94	3.03	3.35
			mm	88	52	38	73	92	100	77	85
30	32	3 & 4	inch	3.78	2.20	1.85	2.87	3.62	3.94	3.03	3.35
			mm	96	56	47	73	92	100	77	85
30	32	5	inch	4.06	2.36	1.85	2.87	3.62	3.94	3.03	3.35
			mm	103	60	47	73	92	100	77	85
60	63	3, 4, & 5	inch	4.29	3.23	2.52	3.19	3.94	4.21	3.03	3.35
			mm	109	82	64	81	100	107	77	85
100	125	3, 4, & 5	inch	5.12	3.70	2.95	3.54	4.49	4.49	3.54	3.54
			mm	130	94	75	90	114	114	90	90

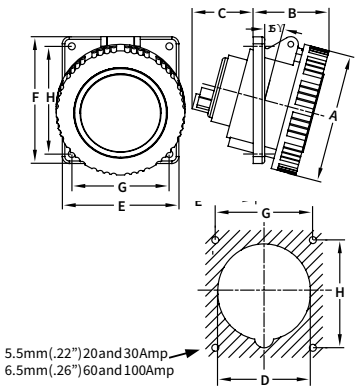

IP44
SPLASH PROOF

RECEPTACLES (Panel Sockets) Angled 80°

AMPS		# of	DIMENSIONS								
N.A.	Intl.	WIRES	UOM	A	B	C	D	E	F	G	H
20	16	3	inch	2.83	3.46	4.29	1.18	2.56	2.05	2.17	1.18
			mm	72	88	109	30	65	52	55	30
20	16	4	inch	3.19	4.25	4.84	1.50	3.15	2.60	2.68	1.57
			mm	81	108	123	38	80	66	68	40
20	16	5	inch	3.46	4.25	4.84	1.50	3.15	2.60	2.68	1.57
			mm	88	108	123	38	80	66	68	40
30	32	3 & 4	inch	3.78	4.76	5.71	1.73	3.54	2.95	3.07	1.77
			mm	96	121	145	44	90	75	78	45
30	32	5	inch	4.06	4.84	5.71	1.73	3.54	2.95	3.07	1.77
			mm	103	123	145	44	90	75	78	45
60	63	3, 4, & 5	inch	4.33	5.63	7.99	2.20	4.49	4.49	3.54	3.54
			mm	110	143	203	56	114	114	90	90

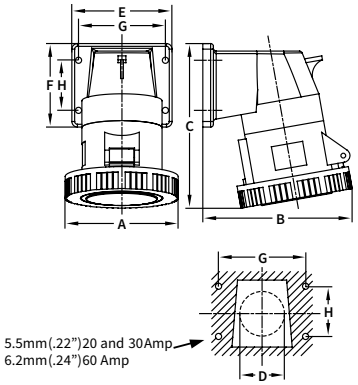

IP44
SPLASH PROOF

NOTE: Dimensions are subject to change without notice. Consult a member of our sales team for the most current information +1 (800) 925-8437.

RECEPTACLES (Panel Sockets) Straight

AMPS		# of	DIMENSIONS								
N.A.	Intl.	WIRES	UOM	A	B	C	D	E	F	G	H
20	16	3	inch	2.68	2.05	1.10	1.81	2.44	2.44	1.85	1.85
			mm	68	52	28	46	62	62	47	47
20	16	4 & 5	inch	3.35	2.09	1.10	2.36	2.95	2.95	2.36	2.36
			mm	85	53	28	60	75	75	60	60
20	16	7	inch	3.35	2.09	1.10	2.36	3.15	3.15	2.36	2.36
			mm	85	53	28	60	80	80	60	60
30	32	3 & 4	inch	3.58	2.56	1.06	2.36	2.95	2.95	2.36	2.36
			mm	91	65	27	60	75	75	60	60
30	32	5	inch	3.86	2.56	1.06	2.36	2.95	2.95	2.36	2.36
			mm	98	65	27	60	75	75	60	60
30	32	7	inch	3.86	2.56	1.06	2.36	3.15	3.15	2.36	2.36
			mm	98	65	27	60	80	80	60	60
60	63	3, 4, & 5	inch	4.49	3.35	2.05	3.54	3.94	4.21	3.03	3.35
			mm	114	85	52	90	100	107	77	85

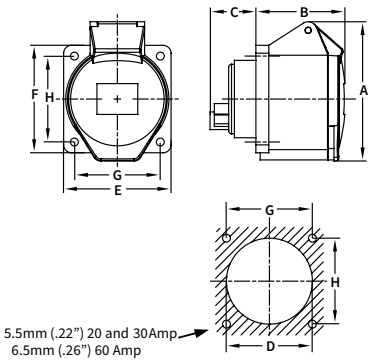

IP44 SPLASH PROOF

RECEPTACLES (Panel Sockets) angled 15°

AMPS		# of	DIMENSIONS								
N.A.	Intl.	WIRES	UOM	A	B	C	D	E	F	G	H
20	16	3	inch	2.68	1.77	1.61	2.01	2.44	2.68	1.85	1.85
			mm	68	45	41	51	62	68	47	47
20	16	4	inch	3.35	2.01	1.50	2.36	2.95	2.95	2.36	2.36
			mm	85	51	38	60	75	75	60	60
20	16	5	inch	3.35	2.01	1.50	2.56	2.95	3.35	2.36	2.36
			mm	85	51	38	65	75	85	60	60
30	32	3	inch	3.58	2.05	1.85	2.64	2.95	3.54	2.36	2.36
			mm	91	52	47	67	75	90	60	60
30	32	4	inch	3.85	2.05	1.85	2.64	2.95	3.54	2.36	2.36
			mm	91	52	47	67	75	90	60	60
30	32	5	inch	3.86	2.20	1.85	2.70	3.15	3.74	2.36	2.36
			mm	98	56	47	68.5	80	95	60	60
60	63	3, 4, & 5	inch		3.11	2.52	3.19	3.94	4.21	3.03	3.35
			mm		79	64	81	100	107	77	85

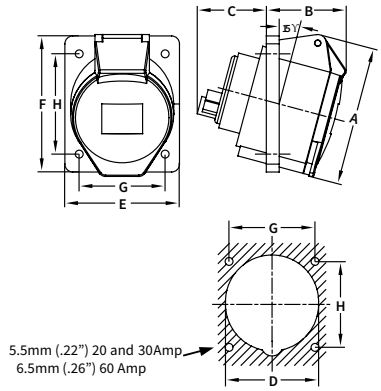

IP44 SPLASH PROOF

RECEPTACLES (Panel Sockets) angled 80°

AMPS		# of	DIMENSIONS								
N.A.	Intl.	WIRES	UOM	A	B	C	D	E	F	G	H
20	16	3	inch	2.01	3.43	4.57	1.18	2.56	2.05	2.17	1.18
			mm	51	87	116	30	65	52	55	30
20	16	4	inch	2.56	4.33	4.80	1.50	3.15	2.60	2.68	1.57
			mm	65	110	122	38	80	66	68	40
20	16	5 & 7	inch	2.56	4.33	4.80	1.50	3.15	2.60	2.68	1.57
			mm	65	110	122	38	80	66	68	40
30	32	3	inch	2.83	4.72	5.55	1.73	3.54	2.95	3.07	1.77
			mm	72	120	141	44	90	75	78	45
30	32	4	inch	2.83	4.72	5.55	1.73	3.54	2.95	3.07	1.77
			mm	72	120	141	44	90	75	78	45
30	32	5 & 7	inch	2.83	4.88	5.59	1.73	3.54	2.95	3.07	1.77
			mm	72	124	142	44	90	75	78	45
60	63	3, 4, & 5	inch	3.78	5.51	7.64	2.20	4.49	4.49	3.54	3.54
			mm	96	140	194	56	114	114	90	90

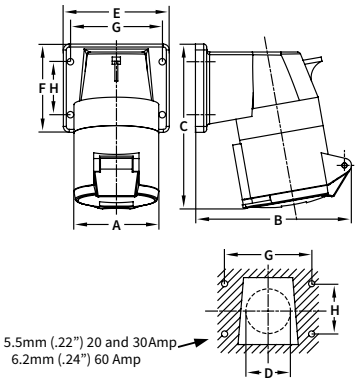

IP44 SPLASH PROOF

NOTE: Dimensions are subject to change without notice. Consult a member of our sales team for the most current information +1 (800) 925-8437.

INLETS (Appliance Plugs) Straight

AMPS		# of	DIMENSIONS								
N.A.	Intl.	WIRES	UOM	A	B	C	D	E	F	G	H
100	125	3	inch	5.12	3.70	2.20	3.54	5.12	5.12	4.09	4.09
			mm	130	94	56	90	130	130	104	104
100	125	4	inch	5.12	3.70	2.20	3.54	5.12	5.12	4.09	4.09
			mm	130	94	56	90	130	130	104	104
100	125	5	inch	5.12	3.70	2.20	3.54	5.12	5.12	4.09	4.09
			mm	130	94	56	90	130	130	104	104

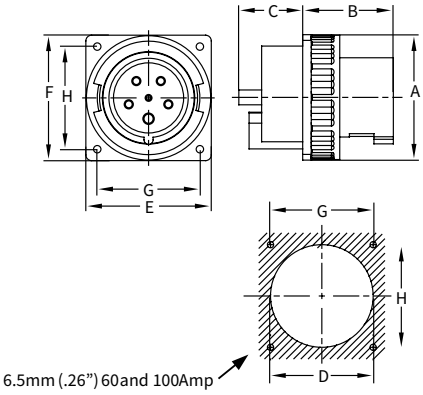

DUST TIGHT IP67 WATERTIGHT

INLETS (Appliance Plugs) Angled 80°

AMPS		# of	DIMENSIONS								
N.A.	Intl.	WIRES	UOM	A	B	C	D	E	F	G	H
20	16	3	inch	2.83	3.19	3.86	1.18	2.56	2.05	2.17	1.18
			mm	72	81	98	30	65	52	55	30
20	16	4	inch	3.19	3.90	4.33	1.50	3.15	2.60	2.68	1.57
			mm	81	99	110	38	80	66	68	40
20	16	5	inch	3.50	4.06	4.45	1.50	3.15	2.60	2.68	1.57
			mm	89	103	113	38	80	66	68	40
30	32	3	inch	3.78	4.45	5.12	1.73	3.54	2.95	3.07	1.77
			mm	96	113	130	44	90	75	78	45
30	32	4	inch	3.78	4.45	5.12	1.73	3.54	2.95	3.07	1.77
			mm	96	113	130	44	90	75	78	45
30	32	5	inch	4.02	4.61	5.12	1.73	3.54	2.95	3.07	1.77
			mm	102	117	130	44	90	75	78	45
60	63	3, 4, & 5	inch	4.33	5.00	7.20	2.20	4.49	4.49	3.54	3.54
			mm	110	127	183	56	114	114	90	90

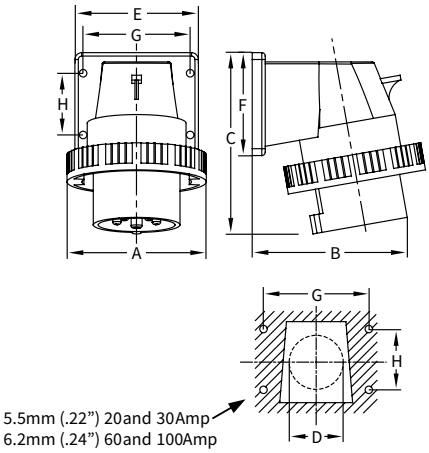

DUST TIGHT IP67 WATERTIGHT

INLETS (Appliance Plugs) Surface mount, Angled 80°

AMPS		# of	DIMENSIONS									
N.A.	Intl.	WIRES	UOM	A	B	C[1]	C[2]	D	E	F	G	Hub
20	16	3	inch	2.83	5.51	6.06	6.73	3.78	3.74	2.62	1.87	3/4”
			mm	72	140	154	171	96	95	66.5	47.5	
20	16	4	inch	3.19	5.51	6.06	6.73	3.78	3.74	2.62	1.87	3/4”
			mm	81	140	154	171	96	95	66.5	47.5	
20	16	5	inch	3.46	5.51	6.06	6.73	3.78	3.74	2.62	1.87	3/4”
			mm	88	140	154	171	96	95	66.5	47.5	
30	32	3	inch	3.78	5.79	6.46	7.13	3.78	3.74	2.62	1.87	3/4”
			mm	96	147	164	181	96	95	66.5	47.5	
30	32	4	inch	3.78	5.79	6.46	7.13	3.78	3.74	2.62	1.87	3/4”
			mm	96	147	164	181	96	95	66.5	47.5	
30	32	5	inch	4.06	5.91	6.46	7.13	3.78	3.74	2.62	1.87	3/4”
			mm	103	150	164	181	96	95	66.5	47.5	

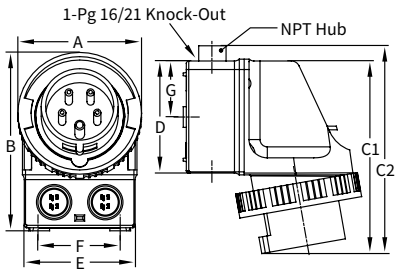

DUST TIGHT IP67 WATERTIGHT

NOTE: Dimensions are subject to change without notice. Consult a member of our sales team for the most current information +1 (800) 925-8437.

INLETS (Appliance Plugs) Straight

AMPS		# of	DIMENSIONS								
N.A.	Intl.	WIRES	UOM	A	B	C	D	E	F	G	H
20	16	3	inch	1.85	1.85	0.87	1.97	2.44	2.44	1.85	1.85
			mm	47	47	22	50	62	62	47	47
20	16	4	inch	2.09	1.85	0.87	2.64	3.15	3.15	2.36	2.36
			mm	53	47	22	67	80	80	60	60
20	16	5 & 7	inch	2.40	1.85	0.87	2.64	3.15	3.15	2.36	2.36
			mm	61	47	22	67	80	80	60	60
30	32	3	inch	2.48	2.20	0.87	2.80	3.15	3.15	2.36	2.36
			mm	63	56	22	71	80	80	60	60
30	32	4	inch	2.48	2.20	0.87	2.80	3.15	3.15	2.36	2.36
			mm	63	56	22	71	80	80	60	60
30	32	5 & 7	inch	2.72	2.20	0.87	2.80	3.15	3.15	2.36	2.36
			mm	69	56	22	71	80	80	60	60
60	63	5	inch	2.99	3.27	1.14	3.39	4.17	4.33	3.54	3.54
			mm	76	83	29	86	106	110	90	90

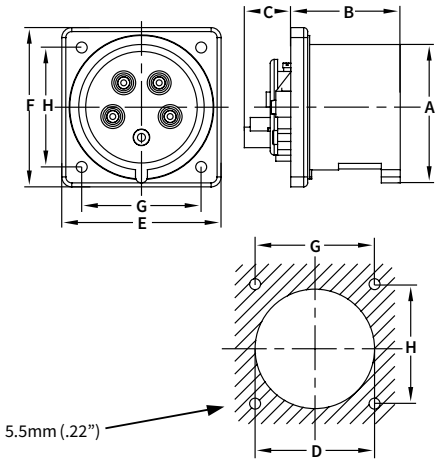

IP44 SPLASH PROOF

INLETS (Appliance Plugs) Angled 80°

AMPS		# of	DIMENSIONS								
N.A.	Intl.	WIRES	UOM	A	B	C	D	E	F	G	H
20	16	3	inch	1.71	2.83	3.82	1.18	2.56	2.05	2.17	1.18
			mm	43.5	72	97	30	65	52	55	30
20	16	4	inch	1.97	3.54	4.33	1.50	3.15	2.60	2.68	1.57
			mm	50	90	110	38	80	66	68	40
20	16	5 & 7	inch	2.20	3.62	4.33	1.50	3.15	2.60	2.68	1.57
			mm	56	92	110	38	80	66	68	40
30	32	3	inch	2.24	4.06	5.08	1.73	3.54	2.95	3.07	1.77
			mm	57	103	129	44	90	75	78	45
30	2	4	inch	2.24	4.06	5.08	1.73	3.54	2.95	3.07	1.77
			mm	57	103	129	44	90	75	78	45
30	32	5 & 7	inch	2.52	4.06	5.08	1.73	3.54	2.95	3.07	1.77
			mm	64	103	129	44	90	75	78	45
60	63	3, 4, & 5	inch	2.72	4.57	7.28	2.20	4.49	4.49	3.54	3.54
			mm	69	116	185	56	114	114	90	90

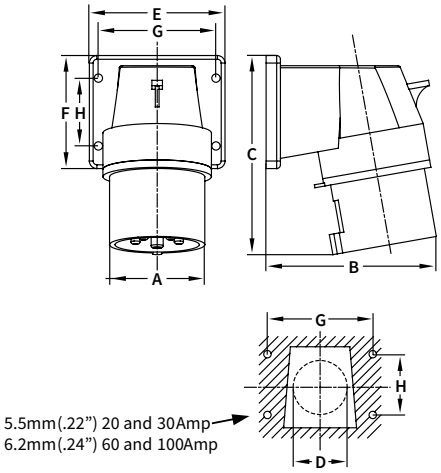

IP44 SPLASH PROOF

INLETS (Appliance Plugs) Surface Mount, Angled 80°

AMPS		# of	DIMENSIONS									
N.A.	Intl.	WIRES	UOM	A	B	C[1]	C[2]	D	E	F	G	Hub
20	16	4	inch	1.97	5.51	5.95	6.61	3.78	3.74	2.62	1.87	3/4"
			mm	50	140	151	168	96	95	66.5	47.5	
20	16	5 & 7	inch	2.20	5.51	5.95	6.61	3.78	3.74	2.62	1.87	3/4"
			mm	56	140	151	168	96	95	66.5	47.5	
30	32	3	inch	2.24	5.51	6.30	6.97	3.78	3.74	2.62	1.87	3/4"
			mm	57	140	160	177	96	95	66.5	47.5	
30	32	4	inch	2.24	5.51	6.30	6.97	3.78	3.74	2.62	1.87	3/4"
			mm	57	140	160	177	96	95	66.5	47.5	
30	32	5 & 7	inch	2.52	5.51	6.30	6.97	3.78	3.74	2.62	1.87	3/4"
			mm	64	140	160	177	96	95	66.5	47.5	

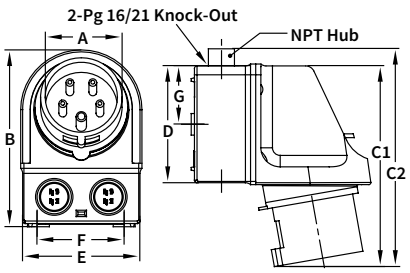

IP44 SPLASH PROOF

NOTE: Dimensions are subject to change without notice. Consult a member of our sales team for the most current information +1 (800) 925-8437.

RECEPTACLES (Panel Sockets) Surface Mount, Angled 80°

AMPS		# of	DIMENSIONS									
N.A.	Intl.	WIRES	UOM	A	B	C¹	C²	D	E	F	G	Hub
20	16	3	inch	2.83	5.51	6.46	7.13	3.78	3.74	2.62	1.87	3/4”
			mm	72	140	164	181	96	95	66.5	47.5	
		4	inch	3.19	5.67	6.46	7.13	3.78	3.74	2.62	1.87	3/4”
			mm	81	144	164	181	96	95	66.5	47.5	
		5	inch	3.46	5.79	6.46	7.13	3.78	3.74	2.62	1.87	3/4”
			mm	88	147	164	181	96	95	66.5	47.5	
30	32	3	inch	3.78	6.06	6.93	7.60	3.78	3.74	2.62	1.87	3/4”
			mm	96	154	176	193	96	95	66.5	47.5	
		4	inch	3.78	6.06	6.93	7.60	3.78	3.74	2.62	1.87	3/4”
			mm	96	154	176	193	96	95	66.5	47.5	
		5	inch	4.06	6.14	6.93	7.60	3.78	3.74	2.62	1.87	3/4”
			mm	103	156	176	193	96	95	66.5	47.5	

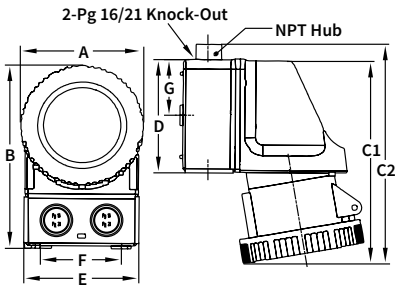

DUST TIGHT IP67 WATERTIGHT

RECEPTACLES (Panel Sockets) Surface Mount, Angled 80°

AMPS		# of	DIMENSIONS									
N.A.	Intl.	WIRES	UOM	A	B	C¹	C²	D	E	F	G	Hub
60	63	4	inch	4.33	7.01	8.82	9.76	6.77	4.76	4.09	5.35	1 1/4”
			mm	110	178	224	248	172	121	104	136	
		5	inch	4.33	7.01	8.82	9.76	6.77	4.76	4.09	5.35	1 1/4”
			mm	110	178	224	248	172	121	104	136	

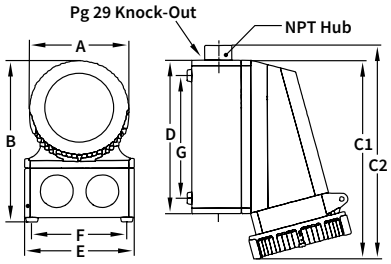

DUST TIGHT IP67 WATERTIGHT

RECEPTACLES (Panel Sockets) Surface Mount, Angled 80°

AMPS		# of	DIMENSIONS									
N.A.	Intl.	WIRES	UOM	A	B	C¹	C²	D	E	F	G	Hub
100	125	3	inch	5.12	7.48	16.0	16.9	10.4	8.66	7.87	9.45	2”
			mm	130	190	406	430	263	220	200	240	
		4	inch	5.12	7.48	16.0	16.9	10.4	8.66	7.87	9.45	2”
			mm	130	190	406	430	263	220	200	240	
		5	inch	5.12	7.48	16.0	16.9	10.4	8.66	7.87	9.45	2”
			mm	130	190	406	430	263	220	200	240	

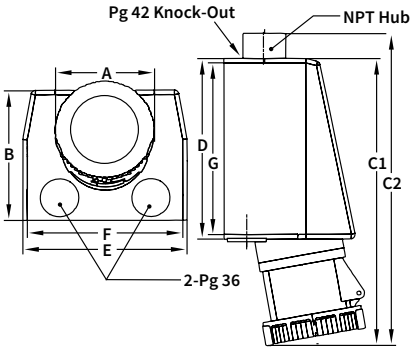

DUST TIGHT IP67 WATERTIGHT

NOTE: Dimensions are subject to change without notice. Consult a member of our sales team for the most current information +1 (800) 925-8437.

RECEPTACLES (Panel Sockets) Surface Mount, Angled 80°

AMPS		# of	DIMENSIONS									
N.A.	Intl.	WIRES	UOM	A	B	C[1]	C[2]	D	E	F	G	Hub
20	16	3	inch	2.01	5.51	6.30	6.97	3.78	3.74	2.62	1.87	3/4"
			mm	51	140	160	177	96	95	66.5	47.5	
20	16	4	inch	2.56	5.63	6.46	7.13	3.78	3.74	2.62	1.87	3/4"
			mm	65	143	164	181	96	95	66.5	47.5	
20	16	5 & 7	inch	2.56	5.75	6.46	7.13	3.78	3.74	2.62	1.87	3/4"
			mm	65	146	164	181	96	95	66.5	47.5	
30	32	3	inch	2.83	6.06	6.81	7.48	3.78	3.74	2.62	1.87	3/4"
			mm	72	154	173	190	96	95	66.5	47.5	
30	32	4	inch	2.83	6.06	6.81	7.48	3.78	3.74	2.62	1.87	3/4"
			mm	72	154	173	190	96	95	66.5	47.5	
30	32	5 & 7	inch	2.83	6.18	6.81	7.48	3.78	3.74	2.62	1.87	3/4"
			mm	72	157	173	190	96	95	66.5	47.5	

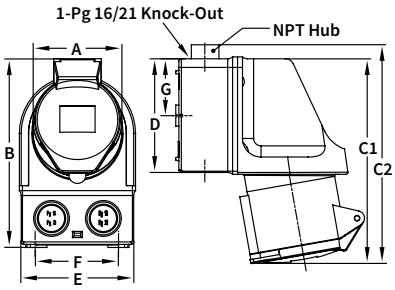

IP44 SPLASH PROOF

RECEPTACLES (Panel Sockets) Surface Mount, Angled 80°

AMPS		# of	DIMENSIONS									
N.A.	Intl.	WIRES	UOM	A	B	C[1]	C[2]	D	E	F	G	Hub
60	63	4	inch	3.78	7.01	8.66	9.61	6.77	4.76	4.09	5.35	1 1/4"
			mm	96	178	220	244	172	121	104	136	
60	63	5	inch	3.78	7.01	8.66	9.61	6.77	4.76	4.09	5.35	1 1/4"
			mm	96	178	220	244	172	121	104	136	

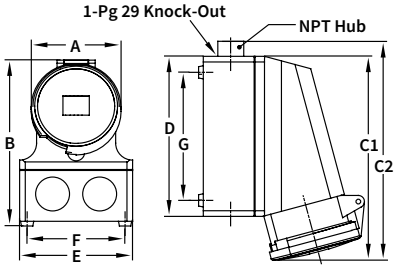

IP44 SPLASH PROOF

NOTE: Dimensions are subject to change without notice. Consult a member of our sales team for the most current information +1 (800) 925-8437.

INLETS (Appliance Plugs) Surface Mount, Angled 80°

AMPS		# of	DIMENSIONS									
N.A.	Intl.	WIRES	UOM	A	B	C[1]	C[2]	D	E	F	G	Hub
60	63	3	inch	4.33	4.65	9.13	10.1	5.98	4.65	4.17	4.72	1 1/4
			mm	110	118	232	256	152	118	106	120	
60	63	4	inch	4.33	4.65	9.13	10.1	5.98	4.65	4.17	4.72	1 1/4
			mm	110	118	232	256	152	118	106	120	
60	63	5	inch	4.33	4.65	9.13	10.1	5.98	4.65	4.17	4.72	1 1/4
			mm	110	118	232	256	152	118	106	120	
100	125	3	inch	5.12	6.89	15.4	16.3	10.4	8.66	7.87	9.45	2
			mm	130	175	390	414	263	220	200	240	
100	125	4	inch	5.12	6.89	15.4	16.3	10.4	8.66	7.87	9.45	2
			mm	130	175	390	414	263	220	200	240	
100	125	5	inch	5.12	6.89	15.4	16.3	10.4	8.66	7.87	9.45	2
			mm	130	175	390	414	263	220	200	240	

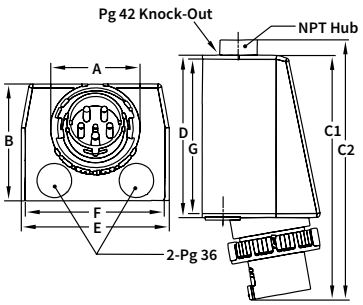

DUST TIGHT
IP67
WATERTIGHT

INLETS (Appliance Plugs) Surface Mount, Angled 80°

AMPS		# of	DIMENSIONS								
N.A.	Intl.	WIRES	UOM	A	B	C	D	E	F	G	PG
	16	3	inch	1.71	2.36	4.33	2.91	2.36	1.79	1.10	
			mm	43.5	60	110	74	60	45.5	28	13.5
	16	4	inch	1.97	2.87	4.61	3.15	2.91	2.36	1.22	
			mm	50	73	117	80	74	60	31	16
	16	5 & 7	inch	2.20	2.87	4.61	3.15	2.91	2.36	1.22	
			mm	56	73	117	80	74	60	31	16
	32	3	inch	2.24	3.15	5.55	3.82	3.23	2.36	1.77	
			mm	57	80	141	97	82	60	45	21
	32	4	inch	2.24	3.15	5.55	3.82	3.23	2.36	1.77	
			mm	57	80	141	97	82	60	45	21
	32	5 & 7	inch	2.52	3.39	5.55	3.82	3.23	2.36	1.77	
			mm	64	86	141	97	82	60	45	21

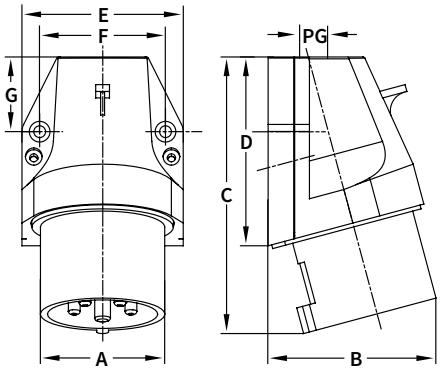

IP44
SPLASH PROOF

RECEPTACLES (Appliance Plugs) Surface Mount, Angled 80°

AMPS		# of	DIMENSIONS								
N.A.	Intl.	WIRES	UOM	A	B	C	D	E	F	G	PG
	16	3	inch	2.68	2.95	4.72	2.91	2.36	1.79	1.10	
			mm	68	75	120	74	60	45.5	28	13.5
	16	4	inch	3.35	3.39	5.04	3.15	2.91	2.36	1.22	
			mm	85	86	128	80	74	60	31	16
	16	5 & 7	inch	3.35	3.54	5.08	3.15	2.91	2.36	1.22	
			mm	85	90	129	80	74	60	31	16
	32	3	inch	3.58	4.06	6.06	3.82	3.23	2.36	1.77	
			mm	91	103	154	97	82	60	45	21
	32	4	inch	3.58	4.06	6.06	3.82	3.23	2.36	1.77	
			mm	91	103	154	97	82	60	45	21
	32	5 & 7	inch	3.86	4.13	6.10	3.82	3.23	2.36	1.77	
			mm	98	105	155	97	82	60	45	21

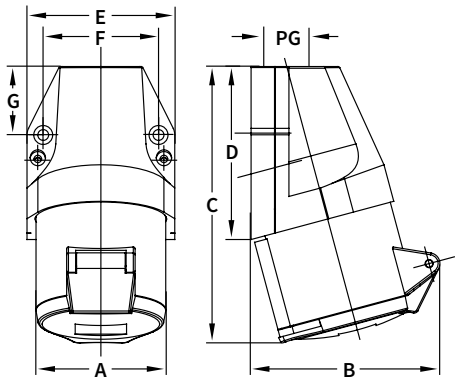

IP44
SPLASH PROOF

NOTE: Dimensions are subject to change without notice. Consult a member of our sales team for the most current information +1 (800) 925-8437.

PLUGS Angled

AMPS		# of	DIMENSIONS				CORD GRIP RANGE
N.A.	Intl.	WIRES	UOM	A	B	C	
20	16	3	inch	3.31	1.98	2.66	0.315 - 0.590
			mm	84	50.3	67.5	8.0 - 15.0
20	16	4	inch	3.98	2.53	3.32	0.395 - 0.650
			mm	101	64.3	84.2	10.0 - 16.5
20	16	5	inch	3.98	2.53	3.39	0.395 - 0.650
			mm	101	64.3	86	10.0 - 16.5
30	32	3	inch	4.53	2.83	3.76	0.435 - 0.865
			mm	115	72	95.5	11.0 - 22.0
30	32	4	inch	4.53	2.83	3.76	0.435 - 0.865
			mm	115	72	95.5	110. - 22.0
30	32	5	inch	4.53	2.83	3.96	0.435 - 0.865
			mm	115	72	100.5	11.0 - 22.0

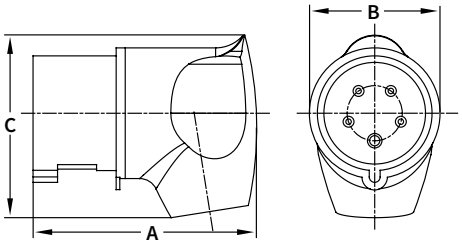

IP44 SPLASH PROOF

CONNECTORS (Couplers) Angled

AMPS		# of	DIMENSIONS				CORD GRIP RANGE
N.A.	Intl.	WIRES	UOM	A	B	C	
20	16	3	inch	3.74	1.98	3.15	0.315 - 0.510
			mm	95	50.3	80	8.0 - 13.0

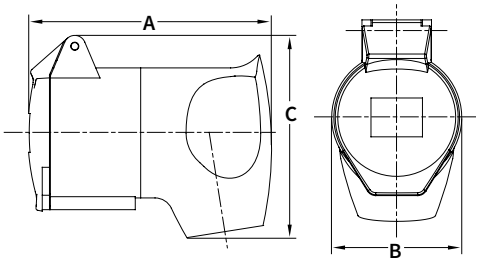

IP44 SPLASH PROOF

NOTE: Dimensions are subject to change without notice. Consult a member of our sales team for the most current information +1 (800) 925-8437.

Cable and Conductor Strip Length

		Device Rating			
North American		20A	30A	60A	100A
International		16A	32A	63A	125A
Outer Jacket Strip Length	inch	2	2 1/2	3	4
	mm	50	63	76	102
Conductor Strip Length	inch	1/2	1/2	3/4	1 1/8
	mm	12	12	19	28
Pilot Conductor Strip Length	inch			7/16	5/8
	mm			11	16

Maximum Torque Applied to Terminal Screws

		Device Rating			
North American		20A	30A	60A	100A
International		16A	32A	63A	125A
Torque Terminal Screw	lb. - in	7.1	7.1	17.6	35.3
	N - m	0.8	0.8	2	4
Torque Pilot Screw	lb. - in			7.1	7.1
	N - m			0.8	0.8

Metric and AWG/MCM Conductor Size Equivalents

Conductor Size		Test Range
mm2	AWG/MCM	(Amperage)
1,0	18	0-8
1,5	16	8-12
2,5	14	12-15
2,5	12	15-20
4,0	10	20-25
6,0	10	25-32
10	8	32-50
16	6	50-65
25	4	65-85
35	3	85-100
35	2	100-115
50	1	115-130
50	1/0	130-150
70	2/0	150-175
95	3/0	175-200
95	4/0	200-225
120	250	225-250
150	300	250-275
185	350	275-300
185	400	300-350
240	500	350-400

Cable and Conductor Range

Amps		Poles and Wires	From		To			Cord Grip Range			
								With Cable Gland		With Cable SLeeve	
N.A.	Intl.		AWG	Type	AWG	Type		North American	International	North American	International
16	20	2P3W	16	S	10	S	inch	0.275 - 0.530	0.275 - 0.530	0.275 - 0.675	0.275 - 0.675
							mm	7 - 13.5	7 - 13.5	7 - 17	7 - 17
		3P4W	16	S	10	S	inch	.395 - .825	0.275 - 0.630	0.315 - 0.800	0.315 - 0.800
							mm	10 - 21	7 - 16	8 - 20	8 - 20
		4P5W	16	S	10	S	inch	.395 - .825	0.275 - 0.630	0.315 - 0.800	0.315 - 0.800
							mm	10 - 21	7 - 16	8 - 20	8 - 20
30	32	2P3W	12	S	8	S	inch	.395 - .825	.395 - .825	0.590 - 0.950	0.435 - 0.950
							mm	10 - 21	10 - 21	15 - 24	11 - 24
		3P4W	12	S	8	S	inch	0.650 - 1.10	.395 - .825	0.590 - 0.950	0.435 - 0.950
							mm	16.5 - 28	10 - 21	15 - 24	11 - 24
		4P5W	12	S	8	S	inch	0.650 - 1.10	.395 - .825	0.590 - 0.950	0.435 - 0.950
							mm	16.5 - 28	10 - 21	15 - 24	11 - 24
60*	63*	2P3W	8	S	4	S or W	inch	.650 - 1.50	.650 - 1.50	0.635 - 1.30	0.600 - 1.30
							mm	16.5 - 38	16.5 - 38	16 - 33	15 - 33
		3P4W	8	S	4	S or W	inch	.650 - 1.50	.650 - 1.50	0.635 - 1.30	0.600 - 1.30
							mm	16.5 - 38	16.5 - 38	16 - 33	15 - 33
		4P5W	8	S	4	S or W	inch	.650 - 1.50	.650 - 1.50	0.635 - 1.30	0.600 - 1.30
							mm	16.5 - 38	16.5 - 38	16 - 33	15 - 33
100*	125*	2P3W	6	S or W	2/0	S or W	inch	.950 - 1.90	.950 - 1.90		
							mm	24 - 48	24 - 48		
		3P4W	6	S or W	2/0	S or W	inch	.950 - 1.90	.950 - 1.90		
							mm	24 - 48	24 - 48		
		4P5W	6	S or W	2/0	S or W	inch	.950 - 1.90	.950 - 1.90		
							mm	24 - 48	24 - 48		

** Pilot conductor 16 to 8 AWG*

NEW PRODUCT ANNOUNCEMENTS
SOMETHING EXCITING IS COMING

We now offer a new line of **UL98 Motor Disconnect switches** and **Cable Raceway** protection systems.

The **NEO generation** of CEE type Plug & Socket Devices are coming soon to the US & North America.

NEO Classic is our traditional design with external strain relief at the smallest possible size. Screwless termination option via cage clamp (CAGE-CLAMP® by WAGO) ensures reliable connections and facilitates ease of operation. Standard Ingress Protection rating is IP54 which is Dust-Tight & Splash-Proof. An IP67 Watertight version will be available soon.

NEO

Classic

Improved ergonomic design using robust housing materials

Screwless Connection

A cage tension spring (CAGE-CLAMP*) enables screwless connection and saves time during assembly.

** WAGO CAGE-CLAMP*

Screw Terminal Connection

The use of Torx screws on the screw terminal ensures optimum power transmission and a longer service life of the screw heads.

Scan QR Code to download one of our industrial electrical catalogs -or- visit **www.waltherelectric.com/downloads/catalogs**

WALTHER-WERKE®
FORTSCHRITT SEIT 1897

F. Walther Electric Corporation
12 World's Fair Drive
Somerset, NJ 08873 USA

+1 (800) 925-8437 toll free
+1 (732) 537-9201 phone
+1 (732) 537-9209 fax

custserv@waltherelectric.com
www.waltherelectric.com

IEC-2109